GREATER CHENNAI CORPORATION

Greater Chennai Corporation (GCC) invites "Request for Qualification cum Request for Proposal" (RFQ-cum-RFP) through e-procurement from reputed entities under single stage Two Bid system through International Competitive Bidding for:

'City Cleaning Project: Collection & Transportation of Solid Waste, Street Sweeping Waste (including street sweeping activities), Horticulture Waste and Collection & Storage of Domestic Hazardous Waste in the Zones 5&6 (Package-6) to the Designated Processing Facility/ Dump Site/ Depositing Centers of Greater Chennai Corporation

TENDER NOTICE NO.: SWMC.No.A7/4640/23

Draft Concession Agreement (Volume-II A)

2024

Table of Contents

1. Article 1: Definitions and Interpretations ... 8

1.1 Definitions ... 8

1.2 Interpretation ... 22

1.3 Measurements and arithmetic conventions ... 24

1.4 Ambiguities and Discrepancies ... 24

1.5 Priority of Agreements, Articles and Schedules ... 24

2. Article 2: The Concession ... 26

2.1 Grant of Concession ... 26

2.2 Concession Period ... 26

2.3 Acceptance of Concession ... 26

2.4 Conditions Precedent ... 26

2.5 Financial Closure ... 28

2.6 Performance Security ... 29

3. Article 3: Project Area and Project Site ... 31

3.1 Handover of Project Area and Project Site ... 31

3.2 Rights, Title and Use of the Project Site and Project Area ... 31

3.3 Peaceful Possession ... 32

3.4 Statutory Clearances ... 33

4. Article 4: Independent Engineer ... 34

4.1 Procedure for Appointment ... 34

4.2 Payment to the Independent Engineer ... 34

4.3 Replacement of the Independent Engineer ... 34

4.4 Eligibility for Re-appointment ... 35

5. Article 5: Concessionaire's Obligations ... 36

5.1 Performance Security ... 36

5.2 Financing Arrangement ... 36

5.3 Micro Implementation and Operation Plan ... 36

5.4 Project Operations ... 38

5.5 Operation & Maintenance ... 39

5.6 Insurance **43**

5.7 Shareholding **44**

5.8 General Obligations **45**

5.9 No Breach of Obligations **47**

6. Article 6: Authority's Obligations ***49***

6.1 Specific obligations **49**

6.2 General obligations **49**

7. Article 7: Change of Scope ***51***

7.1 Change of Scope **51**

7.2 Procedure for Change of Scope **51**

7.3 Framework for Change of Scope **52**

7.4 Computation and Restrictions **54**

7.5 Power of the Authority to undertake works **55**

8. Article 8: Monitoring, Performance Evaluation and Payment ***56***

8.1 Monitoring of Activities **56**

8.2 Performance Evaluation **58**

8.3 Initial Annual Quote (IAQ) **58**

8.4 Quote Applicability **59**

8.5 Rebasing Mechanism **59**

8.6 Penalties **65**

8.7 Surcharge on Penalty **66**

8.8 Payment Mechanism **66**

8.9 Payment during Handing Over Phase **68**

8.10 Resolution of Disputes related to Payment **68**

8.11 Payment of Incentive to the Concessionaire **68**

9. Article 9: Not Used ***70***

10. Article10: Deleted ***71***

11. Article 11: Change in Law ***72***

11.1 Change in Law **72**

11.2 Process & Determination of Impact **72**

11.3 Obligations of the Parties 73

12. Article 12: Force Majeure 74

12.1 Force Majeure Events 74

12.2 Political Events 74

12.3 Non-Political Events 74

12.4 Obligations of the Parties 75

12.5 Termination due to Force Majeure Event 77

12.6 Termination Payment 78

12.7 Liability for other losses, damages etc 78

13. Article 13: Events of Termination and Default 79

13.1 Events of Default and Termination 79

13.2 Termination due to Events of Default 81

13.3 Termination Payments 82

13.4 Rights of the Authority on Termination 83

14. Article 14: Mode of Payment by the Authority 84

14.1 Mode of Payment 84

14.2 Valid Discharge 84

15. Article 15: Hand back of Project Facilities 85

15.1 Hand back and Defect Liability Period 85

15.2 Retention Amount 86

16. Article 16: Independent Auditor 87

16.1 Appointment 87

16.2 Payment of Fees 87

17. Article 17: Dispute Resolution 88

17.1 Amicable Resolution 88

17.2 Arbitration 88

18. Article 18: Representations and Warranties, Disclaimer 89

18.1 Representations and Warranties of the Concessionaire 89

18.2 Representations and Warranties of the Authority 90

18.3 Obligation to notify change 90

19. Article 19: Miscellaneous *91*

19.1 Assignment and Charges **91**

19.2 Interest and Right of Set Off **91**

19.3 Liability and Indemnity **92**

19.4 Governing Law and Jurisdiction **94**

19.5 Waiver **94**

19.6 Survival **94**

19.7 Not used **95**

19.8 Not Used **95**

19.9 Amendments **95**

19.10 Liability for review of Documents **95**

19.11 Third parties **95**

19.12 Ownership **95**

19.13 Successors and assigns **95**

19.14 Limitation of Liability **96**

19.15 Divestment Requirements **96**

19.16 Divestment costs **96**

19.17 Vesting Certificate **96**

19.18 Entire Agreement **97**

19.19 Notices **97**

19.20 Severability **97**

19.21 No Partnership **98**

19.22 Language **98**

19.23 Exclusion of Implied Warranties etc. **98**

19.24 Counterparts **98**

CONCESSION AGREEMENT

THIS CONCESSION AGREEMENT is entered into on this the -------- day of --------- (Month) 2024 (Year) at Chennai

THE GREATER CHENNAI CORPORATION, established under the Chennai City Municipal Corporation Act 1919, represented by its Commissioner and having its principal office at Greater Chennai Corporation, Ripon Buildings, Chennai- 600003 (hereinafter referred to as the **"Authority" (**which expression shall, unless excluded by or repugnant to the context, be deemed to include its administrators, successors and assigns) OF THE ONE PART;

AND

……, a company incorporated under the provisions of the Companies Act, 2013 with CIN …… and having its registered office at ……. (hereinafter referred to as the "**Concessionaire**" (which expression shall, unless repugnant to the context or meaning thereof, include its successors and permitted assigns) OF THE OTHER PART;

The Authority and the Concessionaire are herein after referred to individually as the "Party" and collectively as the "Parties"

WHEREAS

(A) The Authority is desirous to implement City Cleaning Project: Collection & Transportation of Solid Waste, Street Sweeping Waste (including Street Sweeping activities), Horticulture Waste and Collection& Storage of Domestic Hazardous Waste in the Zones 5&6 (herein called Package-6) to the Designated Processing Facility/ Dump Site/ Depositing Centers of Greater Chennai Corporation on DBFOT basis, in accordance with the terms and conditions to be set forth in this Concession Agreement to be entered into.

(B) The Authority had accordingly invited proposals by its Request for Proposal dated [.] the ("RFP") through a single stage bidding for selection of "Successful Bidder" for implementation of the Project.

(C) The Authority had received ……. Proposal(s) in response to the RFP issued dated …… having closure date …….

(D) After evaluation of the bids received, the Authority had accepted the bid of the …… *(the Bidder)* and issued its Letter of Award bearing number …… dated ……. (hereinafter called the "LOA") to the *Lead member of Bidder or the Bidder* ……..... requiring, inter alia, the execution of this Concession Agreement within [30 (thirty)] days of the date of issue thereof. However, the Bidder shall be jointly and severally liable for achieving the CoD.

(E) The Selected Bidder has since promoted and incorporated Special Purpose Vehicle (SPV) under the Companies Act, 2013, and has requested the Authority to accept the S P V

..... as the Concessionaire which shall undertake and perform the obligations and exercise the rights of the ....., including the obligation to enter into this Concession Agreement pursuant to the LOA for undertaking the Project.

(F) By its letter dated ..... the Concessionaire has joined in the said request of the …… to the Authority to accept it as the entity which shall undertake and perform the obligations and exercise the rights of the ..... including the obligation to enter into this Concession Agreement pursuant to the LOA. The Concessionaire has further represented to the effect that it has been promoted by the ..... for the purposes hereof and has delivered to the Authority a legal opinion with respect to the authorization of the Concessionaire to enter into this Concession Agreement and the enforceability of the provisions thereof.

(G) The Authority has {agreed to the said request of the Successful Bidder/Consortium and the Concessionaire and has} accordingly agreed to enter into this Concession Agreement with the Concessionaire for implementation of the Project, subject to and on the terms and conditions set forth hereinafter.

NOW, THEREFORE, in consideration of the foregoing and the respective covenants and agreements set forth in this Concession Agreement, the receipt and sufficiency of which is hereby acknowledged, and intending to be legally bound hereby, the Parties agree as follows:

NOW THIS AGREEMENT WITNESSETH AS FOLLOWS: -

1. Article 1: Definitions and Interpretations

1.1 Definitions

In this Agreement, the following words and expressions shall, unless repugnant to the context or meaning thereof, have the meaning hereinafter respectively specified to them hereunder:

"**Area Based Pro Rata Rate (ABPRR)"** shall mean Monthly Quote (MQ) divided by the Project Area which is the rate per square kilometer and as detailed in the Schedule 20 of Volume II of this Agreement.

"**Additional Cost**" shall mean the additional capital expenditure and/or the additional operating costs or both, as the case may be, which the Concessionaire would be required to incur pursuant to Change in Law and Change in Scope.

"**Affected Party**" shall mean the Party claiming to be affected by a Force Majeure Event in accordance with the provisos of this Concession Agreement.

"**Agreement**" shall mean this Concession Agreement, and includes any amendments hereto made in accordance with the provisions hereof.

"**Applicable Law**" shall mean all laws in force and effect, as of the date hereof, and which may be promulgated or brought into force and effect hereinafter in India including judgments, decrees, injunctions, writs or orders of any court of record, as may be in force and effect during the subsistence of this Agreement and applicable to the Project/the Concessionaire as applicable in India;

"**Applicable Permits**" shall mean all clearances, permits, authorizations, consents and approvals required to be obtained or maintained by the Concessionaire under Applicable Law, in connection with the Project during the subsistence of this Agreement;

"**Arbitration and Conciliation Act**" shall mean the Arbitration and Conciliation Act, 1996 and shall include any amendment to or any re-enactment thereof as in force from time to time;

"**A-T-P"** shall mean Assigned Target (A) minus Tolerance level (T) minus actual Performance (P) as detailed out in Schedule 26 of this Agreement;

"**Authority**" shall mean the Greater Chennai Corporation;

"**Authority's Assets**" shall mean the list of assets as specified in Schedule 3 & 4 of this Agreement;

"**Authorized Representative**" shall mean, in respect of a Party, any person designated (whether by name or as the holder of a specified position or office), as such by such Party by notice in writing given to the other Party including, in the case of a person designated by name, a specimen signature of that person certified by the Party issuing the notice;

"**Bank**" shall mean an entity established under the Banking Regulation Act, 1949 and amended in 2013, and the entity shall be in the list of Scheduled Banks of the Reserve Bank of India;

"Banking Company" shall mean a banking company as defined in sub-Article (*c*) of section 5 of the Banking Regulation Act, 1949;

"Bank Rate" shall mean the rate of interest as notified by Reserve bank of India (RBI) from time to time in pursuance of section 49 of the RBI Act, 1934 or any replacement of such bank rate for the time being in effect;

"Benchmark Round Trip Distance (BRTD)" shall mean the average monthly distance travelled (in Kilometers) by the Refuse Compactor (RC) and Static Compactor vehicles as per the MIOP, for the duration from start of Takingover till COD, where the distance travelled shall be monitored by Global Positioning System (GPS).

"Bid" shall mean the documents in their entirety comprised in the Bid submitted by the Successful Bidder in response to the Request for Proposals (RFP) in accordance with the provisions thereof;

"**Bid Security**" shall mean security offered at the time of submission of Bid as defined in sub-Article 2.20 of ITB as part of the bid documents which shall be 2 % (Two percent) of the Project Value.

"**Biodegradable Waste**" shall mean "Any organic material that can be degraded by microorganisms into simpler stable compounds".

"**Biomethanation**" shall mean the process which entails enzymatic decomposition of organic matter by microbial action to produce methane rich biogas.

"Book Value" shall mean the value of Asset under consideration at which the asset is carried on a Balance Sheet and calculated by taking the cost of an asset minus the accumulated depreciation. Book value is also the net asset value of a company, calculated as total assets minus intangible assets (patents, goodwill) and liabilities;

"Bulk Waste Generator" shall mean as provided in SWM Rules 2016;

"**Collection & Transportation Plan (C&T Plan)**" shall mean, the plan detailed in MIOP depicting collection of Solid Waste from all sources and places within the Project Area and Transporting the same to Disposal or Processing Site;

"**Change in Law**" shall have the meaning specified thereto in Article 11;

"**Change of Scope**" shall mean addition or deletion of Project Area as specified in Article 7;

"**Commencement Date**" shall mean the date of signing of this Concession Agreement;

"**COD**" or "**Commercial Operation Date**" shall mean the date on which the Concessionaire has:
- completed deployment of 100% of the Movable Assets as per the Approved MIOP;

- completed deployment of 100% of the Manpower as per the Approved MIOP;
- commissioned the command-control-center at designated location as per MIOP;
- operationalized the automated KPI monitoring system including SOP's for evaluation of KPI;
- has operationalized the MIS system as per the approved formats in MIOP;
- has taken over all the BOV parking stations;
- has taken over the land parcel for the static compactors;
- has taken over the' vehicle parking stations & workshop; and
- has launched the mobile app.

"**Completion Certificate**" shall mean the certificate issued by the Authority certifying the achievement of Financial Closure, approval of MIOP as per Schedule 19, completion of deployment of infrastructure and manpower as per the Schedules 14 and 16 respectively on recommendation of the Independent Engineer (IE)

"**Concession**" shall mean as specified thereto in Article 2 of this Agreement.

"**Concession Period**" or "**Contract Period**" shall mean a period of 10 (ten) years from the COD;

"**Concessionaire**" shall have the meaning attributed to the Special Purpose Vehicle (SPV) formed by the Selected Bidder hereinabove.

"**Consortium**" shall mean the group of duly constituted legal entities formed pursuant to operation of law consisting of M/s …….., M/s …….. and …… coming together pursuant to the Joint Bidding Agreement dated …….. entered into by them, for the purpose of submitting their proposal for undertaking the Project and their bid being accepted by the Authority to implement the Project through Special Purpose Vehicle formed and registered by them at Chennai in India;

"Consortium Member" shall mean a company specified in Recital (D) as a member of the Consortium.

"**Construction and Demolition Waste**" shall mean the waste as defined in Section 3(c) of the Construction & Demolition Waste Management Rules, 2016;

"**Conditions Precedent**" shall mean have the meaning set forth in sub-Article 2.4;

"**DBFOT**" shall mean Design Build Finance Operate and Transfer and has meaning as ascribed thereto in Tamil Nadu Infrastructure Development Act, 2012;

"**Decentralized Processing Units**" shall mean the small-scale processing facilities undertaking micro composting centers , Bio-methanation plants, Material Recovery Facilities, Resource Recovery Centers, and plastic baling units) established by the Authority in the Project Area;

"Disposal Site" shall mean depositing the Solid Waste in the assigned place in the Dump Site and/or delivering the Solid Waste at the Processing Facility to be established or Decentralized Processing

Facilities or the designated site to be proposed by the Authority and intimated in consultation with IE to the Concessionaire;

"**Domestic Hazardous Waste (DHW)**" shall mean discarded paint drums, pesticide cans, CFL bulbs, tube-lights, expired medicines, broken mercury thermometers, used batteries, used needles and syringes and contaminated gauges. at the household level as well as at the Secondary Collection point level;

"Domestic Hazardous Waste Depositing Centre (DHW Depositing Centre)" shall mean depositing center established by the Authority where DHW collected by the Concessionaire or deposited by the people shall be safely kept and the same deposited waste to be handed over to the DHW Agency;

"**Domestic Hazardous Waste Agency (DHW Agency)**" shall mean the agency contracted by Tamil Nadu Pollution Control Board (TNPCB) to collect, transport & dispose Domestic Hazardous Waste from Domestic Hazardous Waste Depositing Centers in Project Area;

"**Door-to-Door Collection (DTDC)**" shall mean collection of solid waste from the doorstep of households, shops, commercial establishments, offices, institutions or any other non-residential premises and includes collection of such waste from entry gate or a designated location on the ground floor in a housing society, multi storied building or apartments, large residential, commercial or institutional complex or premises or gated community area or as identified & established between Parties at the time of finalization of initial MIOP;

"**Dump Site**" shall mean the designated land at Kodungaiyur 13° 08'10.36" N; 80°16'06.29" E used by the Authority for disposal of collected solid waste by the Concessionaire;

"**Disaster**" shall mean catastrophe, mishap, calamity or grave occurrence in any Project Area, arising out of natural or manmade causes or by accident or negligence which causes substantial loss of life or human suffering or damage to, or degradation of, environment, and is of such a nature or magnitude as to be beyond the coping capacity of the community of the affected area;

"**Dispute Resolution Procedure**" shall mean the procedure for resolution of Disputes set forth in Article 17;

"**Emergency**" shall mean a condition or situation that is likely to endanger the safety of the individuals on or about the Project Facility including the safety of the users thereof or which poses an immediate threat of material damage to the Project;

"**Encumbrance**" shall mean any encumbrance such as mortgage, charge, pledge, lien, hypothecation, security interest, assignment, privilege or priority of any kind having the effect of security or other such obligations and shall include without limitation any designation of loss payees or beneficiaries or any similar arrangement under any insurance policy pertaining to the Project, physical encumbrances, claims for any amounts due on account of taxes, cess, electricity, water and other utility charges and encroachments on the asset transferred by Authority to Concessionaire;

"**Environmental Laws**" shall means all Laws pertaining to the protection of natural resources, the environment, the health and safety of the public, according to Environment (Protection) Act, 1986, Solid Waste Management Rules 2016, The Hazardous Waste Management Rules, 2016, The Air (Prevention and Control of Pollution) Act, 1981, The Water (Prevention and Control of Pollution) Act, 1974, Plastic Waste Management Rules 2016, Construction and Demolition Waste Management Rules, 2016 and further amendments thereof: other related laws, Guidelines and any other central, state or local law, regulation, rule, ordinance or order from government for waste handling and management;

"Escrow Account" shall mean an account which the Parties shall open and maintain with a Bank in which all inflows and outflows of cash on account of Fixed Payment and Performance based Payment, and any other expenditures as the case may be, for operations of the Project shall be credited and debited, in accordance with the provisions of this Concession Agreement;

"Escrow Agent" shall mean a scheduled Bank acting as an agent which shall maintain an Escrow Account where cash credit and debit shall be monitored by the agent and shall act as per the Escrow Agreement, as set forth in the Schedule 24.

"Escrow Agreement" shall mean the tri-party agreement as set forth in Schedule 24.

"**Equity**" shall mean the sum expressed in Indian Rupees representing the paid-up equity share capital of the Concessionaire for meeting the equity component of the actual Project Cost and shall for the purposes of this Agreement include convertible instruments or other similar forms of capital, which shall compulsorily convert into equity share capital of the Company, and any interest-free funds advanced by any shareholder of the Company for meeting such equity component;

"Event of Default" shall have the meaning specified thereto in Article 13;

"**Expiration Date**" shall mean 120 (One Hundred and Twenty) months from the COD;

"**Financial Closure**" shall mean a legally binding commitment of equity holders (of consortium) and debt financiers (Banks/Financial Institution) to provide or mobilize funding for the project where such funding must account for the whole of estimated project capital expenditure;

"Financial Institution (FI)" shall mean a scheduled bank, and/or any other Financial Institution defined or notified under the Reserve Bank of India Act. 1934;

Financial Statement shall mean in relation to a company which has been approved by the Board of Directors of the Concessionaire, includes:
(i) a balance sheet as at the end of the financial year;
(ii) a profit and loss account, or in the case of a company carrying on any activity not for profit, an income and expenditure account for the financial year; and
(iii) any explanatory note annexed to, or forming part of, any document referred herein from (i) to (iii) above;

"**Financial Year**" shall mean the period commencing from April 1 of any given year to March 31 of the succeeding year or any change that may subsequently be promulgated under Indian Law;

"**Fixed Payment (FP)"** shall mean 50 (fifty) percent of the Monthly Quote or rebased Monthly Quote as the case maybe;

"**Force Majeure**" or "**Force Majeure Event**" shall mean an act, event, condition or occurrence as specified in Article 12;

"**Good Industry Practice**" shall mean the exercise of that degree of skill, diligence, prudence and foresight in compliance with the undertakings and obligations under this Agreement which would reasonably and ordinarily be expected of a skilled and an experienced person engaged in the implementation, operation and maintenance or supervision or monitoring thereof of any of them of a project similar to that of the Project;

"**Government Agency**" shall mean Government of India and State Government of Tamil Nadu , Greater Chennai Corporation or Governmental Department, Commission, Board, Body, Bureau, Agency, Authority, Instrumentality, Court or other Judicial or Administrative Body, Central, State, or Local, having jurisdiction over the Concessionaire, the Secondary Collection Points and Workshops or any portion thereof, or the performance of all or any of the services or obligations of the Concessionaire under or pursuant to this Agreement;

"GoTN" shall mean Government of Tamil Nadu;

"GoI" shall mean Government of India;

"**Hand back of Project Facilities**" shall mean as specified thereto in Article 15;

"**Handing Over Report**" shall mean a report where the IE and Authority record the date and time, place, asset, land and other facilities handed over to the Concessionaire as per the provisions of the Agreement;

"**Hazardous Waste**" shall mean as defined under the Hazardous and Other Waste (Management and Transboundary) Rules, 2016 and as amended thereto;

"**Horticultural Waste**" shall mean the leaves, tree branches, garden waste generated from households, public places and commercial establishments in the project area;

"**Hot Spots**" shall mean those locations/ commercial places/ public places/ frequent public gathering locations within the Project Area experiencing high foot fall, which maybe marketplaces, bus stops & stands, public gathering along the banks of water bodies/ canals, areas under the bridges & flyovers, railway stations, malls, recreation centers and those places where littering is high and frequent as listed in the approved MIOP and subsequent amendments thereof;

"**IE Service Agreement**" shall mean the agreement which it has signed with the Authority or Authority Representative for rendering its service as per the Schedule 11 and Article 4 of this Concession Agreement;

"IEC Activities" shall mean the activities to be performed by the Concessionaire during the Concession Period as specified in the Schedule 12;

"**Implementation Period**" shall mean the period starting from the Commencement Date and ending with Scheduled COD;

"Indemnified Party" shall mean the Party entitled to the benefit of an indemnity pursuant to Article 19.3;

"**Initial Annual Quote (IAQ)**" shall mean the lumpsum quote provided by the Concessionaire (as specified in Schedule 27) and accepted by the Authority;

"**Insurance Cover**" shall mean the aggregate of the maximum sums insured under the insurances taken out by the Concessionaire pursuant to Article 5, and includes all insurances required to be taken out by the Concessionaire under sub Article 5.6 but not actually taken, and when used in the context of any act or event, it shall mean the aggregate of the maximum sums insured and payable or deemed to be insured and payable in relation to such act or event;

"**Invoice**" shall mean as specified in Article 8;

"**Information Technology (IT)**" shall mean IT enabled system for tracking Infrastructure deployment, management of human resource including biometric system, georeferencing, geofencing, infrared video camera and GPS tracking and generation of MIS (Management Information System) notes thereof and any other IT infrastructure which might be required during operation phase;

"**ITB**" shall mean Instruction to Bidders as specified in Volume I of this RFP document;

"**Intellectual Property**" shall mean all patents, trade-marks, service marks, logos, get-up, trade names, internet domain names, rights in designs, blue prints, programs and manuals, drawings, copyright (including rights in computer software), database rights, semi-conductor, topography, rights, utility models, rights in know-how and other intellectual property rights, in each case whether registered or unregistered and including applications for registration, and all rights or forms of protection having equivalent or similar effect anywhere in the world;

"**Integrated Waste Processing Facility**" shall mean the facility to be created at the designated site/ location;

"**Landfill Facility**" shall mean the existing dump sites or the Engineered Sanitary Landfill and/or all other related facilities located thereon, and any other facilities identified /created for the disposal of processed or unprocessed waste;

"Lender" shall mean banks, including their successors and assignees, who have agreed to guarantee or provide finance to the Concessionaire under any of the Financing Documents for meeting all or any part of the project cost and who hold pari passu charge on the assets, rights, title and interests of the Concessionaire and who shall submit the following quarterly reports:

(i) Financial Progress;
(ii) Statement of Debt and Equity Contribution; and
(iii) Any other relevant financial information as required by the Authority and IE;

"**Letter of Award (LOA)**" shall mean the Letter of Award issued by the Authority to the Selected Bidder in accordance with sub-Article 3.12.1 of Instruction to Bidder Volume I of RFP;

"**Litter Free Corridor**" shall mean the scope of work as ascribed in Schedule 1 sub section 1.11 of this RFP.

"**Material Adverse Effect**" shall mean a material adverse effect on (a) the ability/negligence of the Concessionaire / or the Authority to exercise any of its rights or perform/discharge any of its duties/obligations under and in accordance with the provisions of this Agreement and/or (b) the legality, validity, binding nature or enforceability of this Agreement;

"**Material Breach**" shall mean a breach by either Party of any of its obligations under this Agreement which has or is likely to have a Material Adverse Effect on the Project and which such Party shall have failed to cure;

"**Minimum Infrastructure & Manpower Requirements**" shall mean infrastructure requirements as set forth in Schedules 14,15,16 & 17 and to be verified jointly by the Authority and IE;

"**Minimum Maintenance Requirements**" shall mean maintenance requirements as set forth in Schedule 21;

"**Minimum Wages"** shall be the applicable minimum wages as notified by the competent authority that must be paid to the skilled and unskilled workers;

"**Mobilization Period**" shall mean the period between date of issuance of LOA and issuance of Completion Certificate. It indicates the time given for putting all manpower, vehicle, equipment and machinery in place to commence the operation as agreed by the Concessionaire in MIOP;

"**Monthly Collection and Transportation Charges (MCTC)**" shall mean the final payment payable to the Concessionaire on monthly basis after all deductions/settlements/ conciliations from the Invoices;

"Monthly Round Trip Distance (MRTD)" shall mean the total distance travelled per month (in Kilometers) by the Refuse Compactor (RC) vehicles where the distance travelled shall be monitored by Global Positioning System (GPS);

"**Monthly Quote"** shall mean as specified in sub Article 8.3 (b);

"**Micro Implementation and Operation Plan (MIOP)**" shall mean the detailed Project Implementation and Operation Plan to be submitted by the Concessionaire to the Authority and IE, covering the micro level details of the Project operation like street wise, ward wise and zone wise infrastructure provisioning and service delivery thereon for achieving the performance standards as per the Schedule 26;

"**Night Conservancy"** shall mean the conservancy activities like street sweeping (manual and mechanical), clearing of secondary collection points, clearance of static compactors, cleaning of RC Bins, removal of unauthorized waste, removal dust/silt lying along road etc in the Project Area (as identified and finalized in the approved MIOP) from 9 pm to 5 am daily with proportionate manpower and equipment including deployment of vehicles during these timings;

"**Non-Conforming Waste**" shall mean waste material of the nature that the Project Facilities/ Project Assets are not designed to collect and/or including hazardous waste, bio-medical Waste, e-waste and/or any other waste not defined as Solid Waste;

"**Operations Period**" shall mean the period commencing from COD and ending at the expiry of the Concession /Termination;

"**O&M requirements**" shall mean the requirements as to the operation and maintenance of the Project set forth in sub Article 5.5;

"Paid-up Share Capital" or "Share Capital Paid-Up" shall mean such aggregate amount of money credited as paid-up as is equivalent to the amount received as paid-up in respect of shares issued and also includes any amount credited as paid-up in respect of shares of the company, but doesn't include any other amount received in respect of such shares;

"**Parties**" shall mean the Parties to this Agreement and "Party" shall mean either of them, as the context may admit or require;

"**PDS**" shall mean specifications of Project Assets as approved in MIOP for the performance of project work in the Project Area which includes specification for all vehicles, machineries, equipment's, e-rickshaws, bins, IT infrastructure hardware and software etc;

"**Performance Based Payment (PP)**" shall mean the payment made to the Concessionaire based on the achievement of KPI targets, which shall be applicable on 50 (fifty) percent of the Monthly Quote;

"**Performance Security**" shall mean the guarantee for performance of its obligations under this contract as specified in sub Article 5.1 whereas the Performance Security shall be 20 % of the Initial Annual Quote;

"**Person**" shall mean any company or association of individuals whether incorporated or not (Tamil Nadu General Clause Act 1891);

"**Independent Engineer (IE)**" shall mean a third party, which is either a company, corporation, partnership, joint venture, or any other legal entity as may be procured through transparent competitive bidding process by the Authority or any agency authorized by the Authority and who shall be the nodal entity for supervision and monitoring of compliance by Concessionaire with respect to the terms and conditions as defined in the Concession Agreement for the Concessionaire, more particularly to undertake, perform, carry out the duties, responsibilities, services and activities set forth in Article 4 and Schedule 11

"**Political Event**" shall mean as set forth in sub Article 12.2;

"**Preliminary Notice**" shall mean the notice of intended Termination by the Party entitled to terminate this Agreement to the other Party setting out, inter alia, the underlying Event of Default;

"**Primary Collection**" shall mean the set of activities as specified in Schedule 1 of this Agreement;

"Project Period" shall mean the period starting from the Start of Taking Over of the Project area till the end of the Concession Period;

"**Street Sweeping and Collection"** shall mean the set of activities as specified in Schedule 1 of this Agreement;

"Priority Services" shall mean the services on the basis of instructions from the Authority directly given to the Concessionaire to carry out conservancy services to the satisfaction of the Authority as specified in Schedule 1 of this Agreement which shall be delivered within the specified time frame;

"**Priority Service Assets**" shall mean the manpower and infrastructure exclusively deployed/ maintained to deliver the Priority Services as specified in Schedule 1 of this Agreement;

"**Project"** shall mean 'City Cleaning Project: Collection & Transportation of Solid Waste, Street Sweeping Waste (including Street Sweeping activities), Horticulture Waste and Collection & Storage of Domestic Hazardous Waste in the Zones No 5&6 (herein called Package-6) to the Designated Processing Facilities/ Dump Site/ Depositing Centers, including design, procurement, build, retrofit, financing and operation and maintenance as per the terms and conditions set forth in this concession agreement;

"**Project Area**" shall mean the areas falling under the Administrative Zones 5&6 falling under Greater Chennai Corporation jurisdiction and boundary map as specified in Schedule 2, and further clarified that Project Area excludes all privately held properties, Industrial townships & area, public institutions (excluding Authority's institutions), Government office & complexes but includes housing societies/houses of Public servants;

"**Project Agreements**" shall mean collectively this Agreement and the project financing agreement (as the case maybe) in connection with the Project;

"**Project Asset/ Facilities**" shall mean the combination of Project Fixed Asset, Project Movable Asset, Authority's Fixed Asset and Authority's Movable Asset;

"**Project Fixed Assets**" shall mean all the fixed assets like command control center, vehicle parking site, vehicle workshop, BoV parking shed, call center infrastructure, static compactor etc. which shall be developed and financed by the concessionaire on Authority specified locations and used during the Project Period ;

"**Project Operation**" shall mean operationalizing of MIOP;

"**Project Operation and Maintenance Services/ Project Operation Requirement (POR)"** shall mean compliance to the Sub Article 5.5;

"**Project Movable Asset**" shall mean all the movable assets including project equipment, waste collection assets, waste storage assets, waste transportation assets, project vehicles procured by the Concessionaire as well as the vehicles, equipment, receptacles handed over by the Authority and used during the Concession Period for the Project as specified in Schedules 14 and 15;

"**Project Review Meeting**" shall mean the periodical meetings held by the Authority to review or monitor the progress or issues related to the Project along with the Concessionaire and/or IE (whenever required);

"**Project Site**" shall mean land parcel or vehicle shed, secondary collection points (where bins shall be placed by the Concessionaire as per the MIOP), DHW Depositing Centre(s), BoV Parking stations, Static Compactors Locations, Attendance shed/office, Command & Control Centre and division offices (as the case may be) within the Project Area;

"Project Value" shall mean the sum of capital cost of the project from the Commencement Date to the expiry of the Concession Period submitted by the Bidder along with the Financial Bid.;

"**Recyclable Waste**" shall mean that part of SW that can be transformed into raw materials for producing new products, which may or may not be similar to the original products;

"Reduced MQ" shall mean Area Based Pro Rata Rate (ABPRR) multiplied by the revised Project Area in case of occurrence of Change of Scope as specified in Article 7;

"**Reports**" shall mean the following reports but not limited to:

a) MIOP ;
b) Financial Closure Report if required;
c) Asset Procurement Report {(1) at the time of taking over, (2) at the time of COD, (3) Annually};
d) Asset Registry Report (annually);
e) Monthly Progress Report (MPR);
f) IAQ Rebasing Report;
g) Accident Report;
h) DHW Disposal Report;

i) Weekly Complaint Redressal Report;

j) Waste Quantity Report to Decentralized Units and Disposal Facility/ Integrated Processing Facility (Monthly);

k) Insurance Report(Annually);

l) Legal Encumbrance Report;

m) EHS Compliance Report (Monthly);

n) IEC Report (Monthly);

o) Daily, Weekly, Monthly and Quarterly Performance Report;

p) Any other Report as and when required by the IE/ Authority;

"**Route**" shall mean each street/road where that the Concessionaire has committed to carry out collection, segregation, transportation and disposal of Solid Waste as well as street sweeping as per the approved MIOP;

"**SBM**" refers to Swachh Bharat Mission (Urban);

"SBI MCLR" shall mean the Marginal Cost of Funds based Lending Rate issued by the State Bank of India on a monthly basis. In case of any change in the applicable lending rate, the revised or new lending rate shall apply.

"Scheduled Bank" shall mean the scheduled bank as defined in sub Article (*e*) of section 2 of the Reserve Bank of India Act, 1934;

"**Secondary Collection Points**" shall mean and include earmarked location of 1.1 cum bins as per the MIOP for depositing waste and whereas locations shall be identified and/ or approved from time to time by the Authority and IE during the Concession Period;

"**Secondary Collection Vehicles"** shall mean Refuse Compactor vehicles (RC vehicles), static compactors, mechanical sweepers, tippers, horticultural waste and carcass removal vehicles;

"Seasonal Action Plan (SAP)" shall mean the Collection and Transportation Plan for monsoon seasons and non-monsoon seasons;

"Special Purpose Vehicle (SPV)" shall mean Private Limited Company incorporated under the Companies Act 1956/2013 and to be registered at Chennai, India, by the Selected Bidder on the receipt of the Letter of Award, to implement the Project; and is not permitted to take up any other work or any contract with anybody for the performance of any work or doing any transaction, except the work or transaction connected with this Project;

"**Street Sweeping**" means and include collection, removal, transportation and disposal of road dust, water table silt, drain silt both manually and mechanically and transportation of same, but shall not include collection, removal, transportation and disposal of construction and demolition debris and mud earth;

"subsidiary or subsidiary company" , in relation to any other company (that is to say the holding company), means a company in which the holding company

(i) controls the composition of the Board of Directors; or

(ii) exercises or controls more than one-half of the total share capital either at its own or together with one or more of its subsidiary companies:

Provided that such class or classes of holding companies as may be prescribed shall not have layers of subsidiaries beyond such numbers as may be prescribed.

Explanation.—For the purposes of this clause,—

(a) a company shall be deemed to be a subsidiary company of the holding company even if the control referred to in sub-clause (i) or sub-clause (ii) is of another subsidiary company of the holding company;

(b) the composition of a company's Board of Directors shall be deemed to be controlled by another company if that other company by exercise of some power exercisable by it at its discretion can appoint or remove all or a majority of the directors;

(c) the expression ―company includes anybody corporate;

(d) layer in relation to a holding company means its subsidiary or subsidiaries;

"**SWM Rules**" shall mean the Solid Waste Management Rules, 2016 and includes any amendments thereto and/or any rule(s) formulated by the Authorities in substitution or suppression of these rules;

"**Solid waste/Waste**" means and includes solid or semi-solid domestic waste, sanitary waste, commercial waste, institutional waste, catering and market waste and other non- residential wastes, street sweepings, silt removed or collected from the surface drains, horticulture waste, agriculture and dairy waste, treated bio-medical waste excluding industrial waste, bio-medical waste and e-waste, battery waste, radio-active waste generated in the area under the local authorities and other entities mentioned in rule 2 of SWM Rules 2016;

"Selected Bidder" shall mean the _____the party selected by the Authority, through a competitive bidding process for implementing the Project;

"TNUHDB" shall mean authorized and unauthorized residential locations as indicated by Tamil Nadu Urban Habitat Development Board;

"**Termination**" shall mean early termination of the Concession, pursuant to Termination Notice or otherwise in accordance with the provisions of this Agreement but shall not, unless the context otherwise requires, include expiry of this Agreement due to efflux of time in the normal course;

"**Termination Date**" shall mean the date specified in the Termination Notice as the date on which Termination occurs;

"**Termination Notice**" shall mean the notice of Termination by either Party to the other Party, in accordance with the applicable provisions of this Agreement;

"Termination Payment" shall mean the payments payable pursuant to sub Article 13.3 of this Agreement;

"**TNPCB**" shall mean Tamil Nadu Pollution Control Board;

"**TPD**" means Tons per Day;

"**Transportation**" shall mean conveyance of solid waste from point of collection and to the disposal site (s) or such designated site, hygienically through specially designed covered transport system so as to prevent foul odour, littering, unsightly conditions and accessibility to vector;

"**Trespasser**" shall mean any person present on the Project Sites and not entitled to be on the Project Sites;

"**Workshop**" shall mean the place where all the repair & maintenance including servicing shall be undertaken for all the Project Assets- Movable;

"**Wholesale Price Index (WPI)**' shall mean the wholesale price index published monthly by Reserve Bank of India.

1.2 Interpretation

In this Agreement, unless the context otherwise requires:

a) references to any legislation or any provision thereof shall include amendment or re- enactment or consolidation of such legislation or any provision thereof so far as such amendment or re-enactment or consolidation applies or is capable of applying to any transaction entered into hereunder;

b) references to Laws of India or Indian Law or Regulation having the force of law shall include the laws, acts, ordinances, rules, regulations, bye laws or notifications which have the force of law in the territory of India and as from time to time may be amended, modified, supplemented, extended or re-enacted;

c) references to a "person" and words denoting a natural person shall be construed as a reference to any firm, company, corporation, government, state or agency of a state or any association or partnership (whether or not having separate legal personality) of two or more of the above and shall include successors and assigns;

d) the table of contents, headings or sub-headings in this Agreement are for convenience of reference only and shall not be used in, and shall not affect, the construction or interpretation of this Agreement;

e) the words "include" and "including" are to be construed without limitation and shall be deemed to be followed by "without limitation" or "but not limited to" whether or not they are followed by such phrases;

f) any reference to any period of time shall mean a reference to that according to Indian Standard Time;

g) any reference today shall mean a reference to a calendar day;

h) reference to a "working day" shall be construed as reference to a day (other than a Sunday) on which banks in the State are generally open for business however this reference shall not be applicable for the project operations;

i) any reference to month/ year shall mean a reference to a calendar month/ year as per the Gregorian calendar;

j) references to any date, period or Project Milestone shall mean and include such date, period or Project Milestone as-may be extended pursuant to this Agreement;

k) any reference to any period commencing "from" a specified day or date and "till" or "until" a specified day or date shall include both such days or dates;

l) References to any gender shall include the other and the neutral gender;

m) "lakh" means a hundred thousand (100,000) and "crore" means ten million (10,000,000);

n) "Indebtedness" shall be construed so as to include any obligation (whether incurred as principal or surety) for the payment or repayment of money, whether present or future, actual or contingent;

o) references to the "winding-up", "dissolution", "insolvency", or "re-organization" of a company or corporation shall be construed so as to include any equivalent or analogous proceedings under the law of the jurisdiction in which such company or corporation is incorporated or any

jurisdiction in which such company or corporation carries on business including the seeking of liquidation, winding-up, reorganization, dissolution, arrangement, protection or relief of debtors;

p) save and except as otherwise provided in this Agreement, any reference, at any time, to any agreement, deed, instrument, license or document of any description shall be construed as reference to that agreement, deed, instrument, license or other document as amended, varied, supplemented, modified or suspended at the time of such reference; provided that this sub-Article (s) shall not operate so as to increase liabilities or obligations of the Authority hereunder or pursuant hereto in any manner whatsoever;

q) any agreement, consent, approval, authorization, notice, communication, information or report required under or pursuant to this Agreement from or by any Party or the Independent Engineer shall be valid and effective only if it is in writing under the hand of a duly authorized representative of such Party or the Independent Engineer, as the case may be, in this behalf and not otherwise.

r) the Schedules and Recitals to this Agreement and the Request for Proposals ("RFP") except volume -III, forms an integral part of this Agreement and will be in full force and effect as though they were expressly set out in the body of this Agreement.

s) references to Recitals, Articles, sub-Articles, Provisos or Schedules in this Agreement shall, except where the context otherwise requires, mean references to Recitals, Articles, sub-Articles, Provisos and Schedules of or to this Agreement; reference to an Annex shall, subject to anything to the contrary specified therein, be construed as a reference to an Annex to the Schedule in which such reference occurs; and reference to a Paragraph shall, subject to anything to the contrary specified therein, be construed as a reference to a Paragraph of the Schedule or Annex, as the case may be, in which such reference appears;

t) Time shall be of the essence in the performance of the Parties' respective obligations. If any time period specified herein is extended, such extended time shall also be of the essence.

u) Unless expressly provided otherwise in this Agreement, any Documentation required to be provided or furnished by the Concessionaire to the Authority and/ or the Independent Engineer shall be provided free of cost and in three copies, and if the Authority and/or the Independent Engineer is required to return any such Documentation with their comments and/or approval, they shall be entitled to retain two copies thereof.

v) Any word or expression used in this Agreement shall, unless otherwise defined or construed in this Agreement, bear its ordinary English meaning and, for these purposes, the General Sub Article Act 1897 shall not apply.

w) Any reference to a statutory provision shall include such provision as is from time to time modified or re-enacted or consolidated so far as such modification or re-enactment or consolidation applies to or is capable of being applied to any transactions entered into hereunder.

x) The words importing singular shall include plural and vice versa, and words denoting natural persons shall include partnerships, firms, companies, councils, joint ventures, trusts, associations, organizations or other entities (whether or not having a separate legal entity);

y) Any reference to any period shall mean a reference according to Indian Standard Time (IST).

z) references to "services/works/service" shall include collection, transportation and safe disposal (to designated locations) of SW/ DHW as well as fabrication, testing, retrofitting, upkeeping, modification, improvement, maintenance of Project Assets by way of design – engineering – financing- procurement.

1.3 Measurements and arithmetic conventions

All measurements and calculations shall be in the metric system and calculations done to 2 (two) decimal places, with the third digit of 5 (five) or above being rounded up and below 5 (five) being rounded down.

1.4 Ambiguities and Discrepancies

In case of ambiguities or discrepancies within this Agreement, the following shall apply:

a) between two Articles of this Agreement, the provisions of specific Articles relevant to the issue under consideration shall prevail over those in other Articles. The decision of the conflict between two Articles shall be decided by majority of Law Officer of the Authority, Law Officer of the Concessionaire and Law Officer of the Independent Engineer.

b) between the written description on the Drawings and the Specifications and Standards, the latter shall prevail;

c) between the written description on the Specifications and Standards, the latter shall prevail i.e. the standards as per the Good Industry Practice or ideal condition.

d) between any value written in numerals and that in words, the latter shall prevail.

1.5 Priority of Agreements, Articles and Schedules

This Agreement, and all other agreements and documents forming part of or referred to in this agreement are to be taken as mutually explanatory and, unless otherwise expressly provided elsewhere in this Agreement, the priority of this Agreement and other documents and agreements forming part hereof or referred to herein shall, in the event of any conflict between them, be in the following order:

a) this Agreement (Volume-IIA);

b) any Subsequent amendments issued during bidding process, prior to signing of Concession agreement (to be termed as part of Volume-IIB);

c) Technical Schedules (Volume-IIB);

d) Instruction to Bidder (Volume-I);

e) In addition to provisions of sub-Article 1.4 (a), in case of ambiguities or discrepancies within this Agreement, the following shall apply:

(i) between the Articles of this Agreement and the Schedules, the Articles shall prevail and between Schedules and Annexes, the Schedules shall prevail.

(ii) between any two Schedules, the Schedule relevant to the issue shall prevail and the decision shall be as per the provisos of 1.4(a) above;

2. Article 2: The Concession

2.1 Grant of Concession

Subject to and in accordance with the terms and conditions set forth in this Agreement, the Authority hereby grants and authorizes the Concessionaire to investigate, study, design, engineer, procure, finance, construct, operate the Project and maintain the Project Assets; to exercise and/or enjoy the rights, powers, privileges, authorizations and entitlements as set forth in this Agreement (collectively "the Concession").

2.2 Concession Period

a) The Concession is hereby granted for a period of ten years commencing from the Commercial Operation Date, during which the Concessionaire is authorized to operate the Project and Project Assets in accordance with the provisions hereof.

b) Provided that:

   a) in the event of the Concession being extended by the Authority beyond the said period of ten years in accordance with the provisions of this Agreement, the Concession Period shall include the period/aggregate period by which the Concession is so extended as per the applicable rules in force, and

   b) in the event of Termination, the Concession Period shall mean and be limited to the period commencing from the COD and ending with the Termination Date.

2.3 Acceptance of Concession

The Concessionaire hereby accepts the Concession and agrees and undertakes to implement the Project/provide and operate Project Assets, and to perform/discharge all of its obligations in accordance with the terms and conditions set forth in this Agreement. In consideration of this the Authority agreeing to permit the Concessionaire to receive Monthly Collection and Transportation Charges (MCTC), from the Authority on monthly basis as per the provisions of this Agreement.

2.4 Conditions Precedent

(A) Condition Precedent of the Authority

The Authority shall within 30 (thirty) days from the Commencement Date satisfy the following conditions precedent:

1. Provide list of Landfill Sites, Dump Yards, and Processing Plants to the Concessionaire where Solid Waste is to be transported or finally disposed of.
2. Provide a list of land parcels and / or built-up space to the Concessionaire for establishment of workshops, parking stations/ garages, location of static compactors and Command Control Centre.
3. Terminate or transfer, as the case maybe, of all the existing contracts entered into by the Authority in relation to the collection, transportation and disposal of Solid Waste as specified in Schedule 1 within the Project Area. It is further clarified that the Authority shall
4. Notify to public through newspaper that the Concessionaire shall have the sole responsibility to collect all Solid Waste including domestic hazardous waste within the Project Area from Public

or any establishment and shall not receive or demand or solicit money for the services rendered from any person or establishment.

5. Notify to the Bulk Waste Generators through newspaper to hand over the Solid Waste including domestic hazardous within the Project Area to the Concessionaire.
6. shall do calibration of the weighbridge at the disposal point / location/decentralized processing facilities and accordingly certified to that effect and ensure that such weighbridge is operational;
7. Appointment of Independent Engineer (IE) or authorising a team of officials of the Authority to act as IE till the appointment of IE (in case of team of officials from Authority acting as IE till the appointment of IE, 100 % payment will be borne by the Authority).

(B) Conditions Precedent of the Concessionaire

a) The Concessionaire shall within 30 (thirty) days from the Commencement Date satisfy the following conditions precedent:

(i) the Concessionaire has delivered to the Authority a Certificate of Incorporation from the competent authority, confirming, inter alia, that the Concessionaire is duly incorporated and existing under the Laws of India and that the Concessionaire is duly authorized to execute this Agreement through a Board Resolution to execute this Agreement and enforceability of the provisions thereof;

(ii) the Concessionaire has placed order of 80% (eighty percent) of the Minimum Infrastructure Requirement as per Schedule 14 and submitted proof of financial transaction along with purchase orders issued to manufacturer and fabricators thereof;

(iii) the Concessionaire has submitted the Draft MIOP as per the sub-Article 5.3 A of this Concession Agreement.

b) The Concessionaire has achieved the Financial Closure as per the sub-Article 2.5 of this Concession Agreement.

(C) Fulfilment of the Conditions Precedent by the Concessionaire

If the Condition Precedent has been fulfilled by the Concessionaire as specified in sub-Article 2.4 (B) then the Authority shall issue “Notice-To-Takeover” the Project Area to the Concessionaire and shall notify in the newspaper about the takeover schedule to Public in Project Area.

(D) Non-fulfilment of the Conditions Precedent by the Concessionaire

If the Conditions Precedent specified in sub-Article 2.4 (B), are not fulfilled by the Concessionaire or have not been waived by the Authority within 90 (ninety) days after the Commencement Date, this shall be construed as Concessionaire’s Event of Default.

(E) Non-fulfilment of the Conditions Precedent by Authority

If any of the conditions as specified in the sub-Article 2.4 (A) is not fulfilled by the Authority within 30 (thirty) days from the Commencement Date, this shall be construed as the Authority’s Event of Default.

(F) Termination Prior to Commercial Operation Date

(a) In the event that the “Commercial Operation Date” cannot be achieved due to the Concessionaire's lack of efforts, negligence or default, the Authority shall be entitled to

forfeit the Performance Security.

(b) Each Party shall make all reasonable endeavours to satisfy the Conditions Precedent within the time stipulated and shall provide the other Party with such reasonable cooperation as may be required to assist that Party in satisfying the Conditions Precedent for which that Party is responsible. Subject only to payment of damages, it is agreed between the Parties that the obligation to fulfil each parties' Conditions Precedent is an independent obligation of the respective Party.

(c) The Parties shall notify each other in writing at least once a week on the progress made in satisfying the Conditions Precedent. Each Party shall promptly inform the other Party when any Condition Precedent for which it is responsible has been satisfied.

(d) Damages for delay by the Authority: In the event that (i) the Authority does not procure fulfilment of any or all of the Conditions Precedent set forth in sub-Article 2.4 (A) within the period specified in respect thereof, and (ii) the delay has not occurred as a result of breach of this Agreement by the Concessionaire or due to Force Majeure, the Authority shall pay to the Concessionaire damages in an amount limited to Rupees 50 (fifty) lakhs. The damages payable hereunder shall be the sole remedy available to the Concessionaire for delay by the Authority; or (iii) it is further clarified that instead of paying penalty to the Concessionaire, the Authority may at its own discretion increase the Concession period equal to the days beyond 45 (forty-five) days of delay, and such extension shall be recorded and the Concession Period clause shall be amended within 60 days of occurrence of such event.

(e) Damages for delay by the Concessionaire: In the event that (i) the Concessionaire does not procure fulfilment of any or all of the Conditions Precedent set forth in sub Article 2.4 (B) within the period specified in respect thereof, and (ii) the delay has not occurred as a result of failure to fulfil the obligations under sub-Article 2.4 (B) or other breach of this Agreement by the Authority, or due to Force Majeure, the Concessionaire shall pay to the Authority damages in an amount calculated at the rate of 0.67% (zero point six seven) of the Performance Security for each day's delay, beyond the period of 45 (forty five) days from Commencement Date, until the fulfilment of such Conditions Precedent. Provided, however, that the damages payable hereunder shall be subject to the maximum limit equal to 10% of the aggregate amount of the Performance Security and upon reaching such limit, the Authority may, in its sole discretion and subject to the provisions of sub-Article 2.4 (D), terminate the Agreement and the Concessionaire shall forfeit the Performance Security to the Authority.

2.5 Financial Closure

(A) The Concessionaire may at its discretion avail project financing for the Project. In the event the Concessionaire decides to avail financing for the initial capital expenditure of the Project it hereby agrees and undertakes that it shall achieve Financial Closure within 70 (Seventy) days from the Commencement Date. In the event of delay in achieving the Financial Closure, the Concessionaire maybe offered a further period not exceeding 15 (fifteen) days, subject to

payment of damages to the Authority at a lumpsum rate of Rs 5,00,000 (five lakhs) per day of delay, provided that the damages specified herein shall be payable every week in advance. In the event of delay in achieving the Financial Closure beyond 90 (Ninety) days no damages shall be payable as it shall be termed as Concessionaire event of default and the entire performance security shall be encashed by the Authority.

(B) The Concessionaire shall, upon occurrence of Financial Closure, notify the Authority forthwith, and shall have provided to the Authority, at least 2 (two) copies of the lender's sanction letter, duly attested by a Director of the Concessionaire confirming the Boards acceptance of the Lender's terms & condition and offer.

(C) Termination due to failure to achieve Financial Closure: Notwithstanding anything to the contrary contained in this Agreement, but subject to sub Article 2.4 (A), in the event that Financial Closure does not occur, for any reason other than Force Majeure, within the period set forth in sub Article 2.4 (A) or the extended period provided thereunder, all rights, privileges, claims and entitlements of the Concessionaire under or arising out of this Agreement shall be deemed to have been waived, and to have ceased with the concurrence of the Concessionaire, and the Concession Agreement shall be deemed to have been terminated and the Authority shall encash the Performance Security.

(D) On achievement of Financial Closure, the Concessionaire shall submit documentary evidence like Lender's sanction letter, agreement with the banker, term sheet, financial model and repayment schedule to the Authority. The Authority may ask for additional documents as it deems fit to satisfy itself about the Financial Closure.

(E) As the case may be, the Concessionaire may at its discretion not avail project financing from Banks or Financial Institution and fund the initial capital expenditure of the project from its own sources of fund. The Successful Bidder shall submit those documentary evidence: (i) net-worth certificate issued by chartered accountant equal to 50% (fifty percent) of the first year capital expenditure requirement as indicated in the Financial Bid (ii) free cash flow statement issued by chartered accountant equal to 100% (hundred percent) of the first year capital requirement as indicated in the Financial Bid (iii) Board Resolution of the Bidder (in case of consortium all consortium partners shall issue separate Board Resolution) pledging fund infusion in proportion to the shareholding pattern as per the Joint Bidding Agreement.

2.6 Performance Security

(A) Appropriation of Performance Security: Upon occurrence of a Concessionaire's Default or failure to meet any Condition Precedent, the Authority shall, without prejudice to its other rights and remedies hereunder or in law, be entitled to encash and appropriate the amounts due to it for and in respect of such Concessionaire Default or for failure to meet any Condition Precedent.

(B) Upon such encashment and appropriation of Performance Security, as the case may be, the Concessionaire shall, within 7 (seven) working days thereof, replenish, in case of partial appropriation, to the original level of the relevant Performance Security. In case of appropriation of the entire amount of Performance Security, as the case may be, the

Concessionaire shall provide a fresh Performance Security within 5 (five) working days thereof, failing which the Authority shall be entitled to terminate this Agreement in accordance with sub-Article 2.5 (C).

(C) Release of Performance Security: The Performance Security shall remain in force and effect till expiry or termination of the Concession Agreement and shall be released within 60 (sixty) working days from the expiration or termination date of the Concession Agreement.

3. Article 3: Project Area and Project Site

3.1 Handover of Project Area and Project Site

a) The handover of the Project Area and Project Site shall be as per the approved MIOP and the Parties shall deliberate and decide on taking over of zones based on the ground reality during MIOP preparation.

b) The Authority hereby undertakes to issue "Notice-To-Takeover" to the concessionaire and shall handover to the Concessionaire the Project Area for Project implementation as per the terms and conditions of this RFP subject to a minimum of achievement of Financial Closure, procurement of minimum required infrastructure, manpower and approval of MIOP.

c) The Concessionaire shall start taking over of the Project Area for the Project implementation within a maximum period of 90 (ninety) days from the Commencement Date.

d) The Concessionaire shall complete the take-over of the Project Area as per the approved MIOP within a period of 22 (twenty-two) days from the issuance of "Notice to take-over "certificate subject to sub-Article 2.4 of Vol II A.

e) As the case may be, if the Concessionaire faces the hardship and the Concessionaire has submitted the detail of those hardship in writing to the Authority & IE and the hardship has resulted in delay in achieving those delay then the Take Over period shall be extended for such delayed period, but maximum up to 30 days. If the hardship prevails more than the 30 days then the Parties shall take action in accordance with "Change in Scope" and the revised project area shall be termed as "Revised Project Area". It is further clarified that during the subsistence of the Concession Period the project area which was not handed over to the Concessionaire at the time of Taking-Over/ Handing-Over may be handed over to the Concessionaire only if the hardship has been removed and the Parties shall act as per the provisions of the Concession Agreement.

3.2 Rights, Title and Use of the Project Site and Project Area

a) The information about the Project Site (Schedule 3 and Schedule 4 except DHW Depositing Centres) and Project Area set out in Schedule 2 is provided by the Authority in good faith and with due regard to the matters for which such information is required by the Concessionaire. The Authority agrees to provide to the Concessionaire, upon a reasonable request, any further information relating to the Project Site and Project Area, which the Authority may possess. Subject to this the Authority makes no representation and gives no warranty to the Concessionaire in respect of the condition of the Project Site and Project Area.

b) The Authority confirms that upon the Project Site and Project Area being handed over pursuant to the preceding sub-Article (a) the Concessionaire shall have the exclusive right to enter upon, occupy and use the Project Site and Project Area and to make at its costs and expenses such development and improvements in the Project Area and Project Site as may be necessary or appropriate to implement the Project and to provide service subject to and in accordance with the provisions of this Agreement.

c) The Concessionaire shall not without prior written consent or approval of the Authority use the

Project Site and Project Area for any purpose other than for the purposes of the Project and purposes incidental thereto as permitted under this Agreement or as may otherwise be approved by the Authority.

d) The Concessionaire shall allow access to, and use of the Project Site for such other public purposes (in case of emergency) as the Authority may specify, provided that such access or use does not result in a Material Adverse Effect or closure of Project Site for a period exceeding 120 (one hundred twenty) days and that the Authority undertakes to ensure that the Project Site is restored at the cost and expenses of the Authority as per the Specifications and Standards. Where such access or use causes any loss the Concessionaire, the Authority shall compensate the Concessionaire for such loss in consultation with IE or restore it as per the specification and standard as specified in MIOP.

e) The Concessionaire shall not part with or create any Encumbrance on the whole or any part of the Project Site save and except as set forth and permitted under this Agreement. The rights granted herein shall be effective only during the Concession Period and shall cease with the termination or expiration of this Concession Agreement.

f) The Authority warrants that the Project Sites shall be handed over to the Concessionaire, free of all encumbrances. (i) In case any utility charge is pending against the Project Site, the Authority shall pay for those outstanding charges and if any delay happens on part of Authority for clearance of such outstanding charges, then the COD shall be extended for each day of delay. (ii) In case any physical encumbrances exist at the Project Site during taking over, the Authority shall remove those physical encumbrances and if any delay happens on part of Authority for removal of physical encumbrance then the COD shall be extended for each day of delay.

3.3 Peaceful Possession

The Authority warrants that:

a) the Project Area being under the Authority's administration wherein the Authority providing various citizen services within the Project Area, the Concessionaire shall not levy any charges, fees, fines, penalties or create any physical or legal Encumbrances to the residents within the Project Area;

b) the Project Site having been acquired through the due process of law and belongs to and vested with the Authority, and that the Authority has full powers to hold, dispose of and deal with the same consistent, inter alia, with the provisions of this Agreement;

c) the Concessionaire shall, subject to complying with the terms and conditions of this Agreement, remain in peaceful possession and enjoyment of the Project Site and Project Area during the Concession Period. In the event the Concessionaire is obstructed by any Person claiming any right, title or interest in or over the Project Site or any part thereof or in the event of any enforcement action including any attachment, distraint, appointment of receiver or liquidator being initiated by any Person claiming to have any interest in/ charge on the Project Site or any part thereof, the Authority shall, if called upon by the Concessionaire, defend such claims and proceedings and also keep the Concessionaire indemnified against any direct or consequential

loss or damages which the Concessionaire may suffer, on account of any such right, title, interest or charge.

3.4 Statutory Clearances

a) The Authority confirms that the Project Site has been granted clearances and is free from all Encumbrances. The Concessionaire shall, however, apply for and obtain any other Applicable Permits related to Project Site/Project Facilities for creating Project from the Competent Authorities and notify the same clearances for the Project Facilities to the Authority and the IE.

b) The Authority shall issue such letter or enter into any agreement with the concessionaire, for obtaining any Permit / licensee/ utility connection/ clearances by the Concessionaire.

4. Article 4: Independent Engineer

4.1 Procedure for Appointment

a) The Authority shall appoint a consulting engineering firm in accordance with the selection criteria set forth in the Tamil Nadu Transparency in Tenders Act, 1998 and read with the Tamil Nadu Transparency in Tenders (Public Private Partnership Procurement) Rules, 2012 and any amendments thereof to be the independent consultant under this Agreement (the "Independent Engineer").

b) The appointment shall be made no later than 30 (Thirty) days from the Commencement Date and shall initially be for a period of 5 (five) years which may be extended for a period not exceeding 6 (six) months from the IE service expiration date subject to replacement as specified in sub-Article 4.3 (a).

c) Before 3 (three) months of expected expiration date IE Service Agreement, the Authority shall appoint an Independent Engineer for further terms in accordance with the provisions of the above stated sub-Articles 4.1 (a) and (b).

d) The detailed Scope of Work of the Independent Engineer is provided in Schedule 11 of this Concession Agreement.

4.2 Payment to the Independent Engineer

a) The cost of service of IE shall be discovered through a transparent bidding process to be conducted either by the Authority/ any Agency Authorized by the Authority/ PSU/ Board or the body corporate as the Authority deems fit.

b) The payment made to the Independent Engineer shall be shared equally between the Authority and the Concessionaire.

c) The Authority shall make the monthly payment to the IE within 30 (thirty) days from the submission of the monthly invoice by the IE.

d) Thereafter the Authority shall deduct relevant payment according to Schedule 11 of Volume II B of this RFP.

4.3 Replacement of the Independent Engineer

The Parties may replace the Independent Engineer for the time being in any of the following circumstances:

a. if the Authority or the Concessionaire has reason to believe that the Independent Engineer is not discharging its duties in a fair, appropriate and diligent manner, the Authority may terminate on its own or on request of Concessionaire can investigate non-performance of IE and satisfy itself of non-performance of the IE and terminate IE service agreement and appoint another Independent Engineer in accordance with the sub-Article 4.1 (a). It is further clarified that new IE shall take over from the incumbent IE within the period of 30 (thirty) days form the date of signing of IE service agreement and the incumbent IE shall be discharged there on;

b. it is further clarified that during the subsistence of notice period to IE, Parties shall form

core committee of five officials, where two officials each shall be nominated by Parties and one official shall be selected from the list of Arbitrators of Authority, and this core committee shall oversee the performance and deliverables of the IE, till the new IE assumes charge of the Project;

4.4 Eligibility for Re-appointment

The existing IE shall be eligible for participation in the subsequent bidding process subject to the production of a certificate of satisfactory performance from the Authority.

5. Article 5: Concessionaire's Obligations

In addition to and not in derogation or substitution of any of its other obligations under this Agreement, the Concessionaire shall have the following obligations:

5.1 Performance Security

5.1.1 The Concessionaire shall, for due and punctual performance of its obligations, deliver to the Authority, prior to the execution of this Agreement, a Performance Security from a scheduled commercial bank acceptable to the Authority, in the form as set forth in Schedule 18, (the "Performance Security") for a sum equal to 20 % (Twenty percent) of the Initial Annual Quote which is Rupees ..... only.

5.1.2 The Performance Security shall be valid up to 60 (sixty) days beyond the Concession expiration date.

5.1.3 The Concessionaire shall ensure that the Bank Guarantee component of the Performance Security is renewed 30 (thirty) days prior to its expiration date failing which the Performance Security shall be forfeited.

5.1.4 Provided, further that if the Concessionaire submits the fresh Performance Security within the period of expiration date of the Performance Security, then the forfeited amount shall be returned to the Concessionaire post deduction of 5 % of the forfeited amount.

5.1.5 In case the Concessionaire has failed to submit the fresh Performance Security within the specified period, then the Concession Agreement shall be deemed expired and terminated.

5.1.6 Provided that if the Agreement is terminated due to any event other than a Concessionaire Event of Default, the Performance Security if subsisting as of the Termination Date shall, subject to the Authority's right to receive amounts, if any due from the Concessionaire under this Agreement, be duly discharged and released to the Concessionaire

5.2 Financing Arrangement

5.2.1 The Concessionaire shall at its cost, expenses and risk make such financing arrangement as would be necessary to finance the capital expenditure of the Project including working capital requirement for three months, to meet Project KPI requirements and other obligations under this Agreement, in a timely manner.

5.2.2 The Concessionaire shall achieve Financial Closure as specified in sub-Article 2.5 of this Concession Agreement, and thereof submit to the Authority documents evidencing the same as per the sub-Article 2.5 (D).

5.3 Micro Implementation and Operation Plan

A. Preparation of MIOP

The Concessionaire shall prepare the MIOP as per Schedule 19 of Vol II B and the various provisos of this Concession Agreement and submit the draft MIOP within 30 (thirty) days from the Commencement date to the IE and the Authority.

B. Review of draft MIOP

a) The Concessionaire shall submit three copies each of the MIOP to the Independent

Engineer and the Authority.

b) By forwarding the MIOP to the Independent Engineer and the Authority pursuant to the preceding sub-Article (a), the Concessionaire shall be deemed to have represented that it has verified and determined that the submitted MIOP is in conformity with the Schedules.

c) (1) Within 15 (fifteen) days of receipt of the draft MIOP, the Independent Engineer shall review the same taking into account, inter alia, comments of the Authority, if any, thereon, and convey its comments/observations to the Concessionaire on the conformity of the MIOP with the Schedules. (2) If the comments/observations of the Independent Engineer indicate that the MIOP is not in conformity with the Schedules, such MIOP shall be revised by the Concessionaire to the extent necessary and resubmitted to Independent Engineer within 10 (ten) days of receipt of comments. (3) The Concessionaire shall resubmit the revised MIOP (three copies each to IE and the Authority). (4) The Independent Engineer in consultation with the Authority shall review and communicate observations on the revised MIOP within 05 (five) days. (5) On receipt of the communication from the Authority and the IE, the concessionaire shall submit the final MIOP incorporating all changes and thereafter the Authority may approve it within 05 (five) days of receipt of the same.

Sl. No.	Milestone	Timeline from Commencement Date
1.	Submission of Draft MIOP	30
2.	Review & Comments given by IE & Authority	45
3.	Submission of Revised MIOP by the Concessionaire	55
4.	Review & Comments given by IE & Authority	60
5.	Submission of Final MIOP by the Concessionaire and Approval by Authority	65

d) If, within the period stipulated in the preceding sub-Article (c) above, the Independent Engineer does not respond to the draft MIOP submitted by the Concessionaire, the Concessionaire shall be entitled to proceed with the Project with the approval of the Authority or the Authority may take appropriate measures.

e) Notwithstanding any review or failure to review by or the comments/observations of the Independent Engineer or the Authority, the Concessionaire shall be solely responsible for the adequacy of the MIOP and their conformity with the Schedules and shall not be relieved or absolved in any manner whatsoever of any of its obligations hereunder.

f) The Concessionaire shall be responsible for delays in meeting the Project requirements caused by reason of MIOP not being in conformity with the Schedules and shall not be entitled to seek any relief in that regard from the Authority.

g) Within 65 (sixty-five) days from the Commencement Date, the Concessionaire shall furnish to the IE and the Authority three copies each of the final approved MIOP duly verified by the Independent Engineer.

h) The approved MIOP shall be amended (i) as per the requirements of the Authority up to

two times in a year whereas the Authority shall put the request of revision of MIOP through the IE and/ or (ii) the MIOP shall be amended by the Concessionaire on an annual basis to expand the infrastructure and service requirements of the Project Area.

5.4 Project Operations

a) Construction of Project Facilities

(i) The Concessionaire shall be after taking over of the Project Sites as detailed in Schedules 3 & 4 shall modify the Project Fixed Assets with approval form the Authority as-per the Good Industry Practice. The Project Fixed Assets shall include but not limited to:

a) Data Control Room (to be intimidated during MIOP)
b) Call Centre (IVRS) (to be intimidated during MIOP)
c) Workshops (as per Schedule 4)
d) Parking Sheds (as per Schedule 3)
e) Static Compactor Locations

(ii) Nothing contained in the preceding sub-Article (i) above shall be deemed to preclude the Concessionaire from commencing Construction Works prior to the Handing Over Phase, provided the Concessionaire shall do so entirely at its own cost and risk, and shall not be entitled to seek any compensation therefor or in respect thereof in the event the Agreement is terminated prior to Financial Closure for reasons whatsoever. Provided that unless otherwise permitted by the Authority, no construction works shall begin until the Independent Engineer is in place and has assumed charge. The Concessionaire shall immediately upon commencement of construction works notify the Authority of the same.

(iii) The Concessionaire may undertake construction works by itself or through a contractor possessing requisite technical, financial and managerial expertise/capability; but in either case, the Concessionaire shall remain solely responsible to keep Project Fixed Assets as per the Good Industry Practice.

(iv) The Concessionaire shall, before commencement of services:

a) have requisite organization and designate and appoint suitable officers/ representatives as it may deem appropriate to supervise the services, to deal with the Independent Engineer/the Authority and to be responsible for all necessary exchange of information required pursuant to this Agreement.

b) provide a furnished office accommodation for the Independent Engineer having dedicated seating capacity of six persons and one conference room of for ten persons, whereas such building space shall be provided by the Authority.

c) has intention to deliver services in accordance with the approved MIOP.

d) shall receive COD certificate as per the provisions of the Concession Agreement.

5.5 Operation & Maintenance

As per the proviso of this sub-Article, the Concessionaire shall implement the Project in the Project Area as detailed hereunder:

A. Project Operation Requirements (POR)

The Concessionaire, from the start of the Taking Over Phase till the Expiration or Termination of the Concession Agreement, shall:

(i) operate and maintain the Project and the Project Assets by itself, and if required, modify, repair, retrofit or otherwise make improvements to the Project and the Project Facility to comply with specifications & standards/ KPIs, and other requirements set forth in this Agreement, Good Industry Practice, Applicable Laws, Applicable Permits and manufacturer's guidelines and instructions.

(ii) ensure smooth and uninterrupted flow of traffic during normal operating conditions and rely more in Night Conservancy operation.

(iii) ensure more than 50 (fifty) percent of the project operations is implemented as Night Conservancy as per MIOP.

(iv) minimize disruption to traffic in the event of accidents or other incidents affecting the safety and use of the Project Assets by providing a rapid and effective response and for this purpose maintaining liaison with emergency services.

(v) undertake routine maintenance including prompt repairs of all the machinery and other infrastructure procured for project implementation. The Concessionaire shall maintain a logbook (physical as well as digital) for preventive maintenance as well as breakdown maintenance and shall be submitted for review of the Independent Engineer/Authority at regular intervals as may be decided by the Independent Engineer/Authority.

(vi) undertake Project Assets maintenance works in accordance with MIOP and as per the scheduled maintenance.

(vii) prevent with the assistance of concerned law enforcement agencies where necessary, any unauthorised entry to and exit of DHW from the DHW Centre.

(viii) prevent with the assistance of the concerned law enforcement agencies where necessary, any encroachments on the Project Facilities.

(ix) adhere to the Safety and Environment Standards set out in Schedule-9 of Volume -IIB of this Agreement.

(x) operate and maintain the Project Area and Project Facilities in accordance with the O&M Requirements as set out in the MIOP.

(xi) have requisite organisation and designate and appoint suitable representatives as it may deem appropriate to supervise the Project and to deal with the Independent Engineer/the Authority and to be responsible for all necessary exchange of information required pursuant to this Agreement.

(xii) undertake all such acts, deeds and things as may be necessary or required to adhere to the project schedule and to achieve Project COD under and in accordance with this Agreement.

(xiii) at all times, afford access to the Project Site to the authorised representatives of the Authority, the Independent Engineer and officer of any Government Agency having jurisdiction over the Project, including those concerned with safety, public health, road transportation, sanitation, security and environmental protection to inspect the Project Area and to investigate any matter within their Authority and upon reasonable notice, the Concessionaire shall provide to such persons reasonable assistance necessary to carry out their respective duties and functions;

(xiv) be responsible for ensuring that any existing utility on, under or above the Project Site is kept in continuous satisfactory use, if necessary, by the use of suitable arrangement;

(xv) maintain adequate precaution in moving large vehicles and safeguard public assets like signages, board, CCTV camera and wire, telecommunication cables, electricity wire/cables, beat offices, bin area, pedestrian foot path, public toilet area, etc. In case of occurrence of damages during project operations caused by the Concessionaire except Force Majeure Events, the cost shall be borne by the Concessionaire including private properties;

(xvi) obtain at their cost such facilities (warehouses, employee quarters etc.) in or outside the Project Area as may be required by it for the purposes of the Project and the performance of its obligations under this Agreement.

B. Operation and Maintenance during Handing Over Phase

During this phase, the Concessionaire shall take over the Project Area and Project Site from Authority either fully or in a phased manner as per the scheduled mobilization detailed in MIOP and operate and maintain the Project Area and Project Site ensuring uninterrupted services as per the provisions of the Agreement.

C. Operation and Maintenance post COD

(a) After COD, the Concessionaire shall perform and deliver its services as per the Key Performance Indicators thresholds or above the threshold limits and ensure that the quality of service and safety are maintained as per Good Industry Practice. Further, the Concessionaire shall not mix the C&D waste, Domestic Hazardous Waste, Biomedical waste, silt etc with solid waste. The Concessionaire shall deliver the waste with quantity and characteristics as prescribed in Schedule 6 of Volume II (B).

(b) The Concessionaire shall ensure that the deployment of resources and infrastructure for smooth services shall be ensured all the time. Any short fall on account of shortage or downtime due to maintenance issue shall not impact the quality, extent and frequency of services. For the avoidance of doubt, it is agreed that the Concessionaire shall at all times be responsible for ensuring safe operation of the Project Assets and meeting the Key Performance Indicators. Notwithstanding anything contained herein this Agreement, the service levels within the Project Area shall be as per the approved MIOP Plan submitted by the Concessionaire.

(c) On the date of commencement of Taking Over, till expiration or termination date of the Concession, or as soon thereafter as possible:

(i) The Concessionaire shall obtain/renew and retain all the Applicable Permits required from the date of start of Takingover till the expiry or termination of the Concession Agreement.

(ii) The Concessionaire shall perform operation & maintenance of the existing Project Facilities in compliance with Applicable Law;

(iii) The Concessionaire shall, provide the Authority and the Independent Engineer access to the Project Assets all the times including access to all data and reports held within various electronic information systems managed by the Concessionaire pertaining to Project.

(iv) The key activities to be undertaken by the Concessionaire during the Concession period comprise of the following:

(a) implementation of the agreed MIOP including all necessary activities identified therein.

(b) operation and maintenance of the Existing Project Assets from the Take Over Date by taking over the Existing Project Facilities, commencing all operations and maintenance activities, and systematically moving from present service standards to new KPI based service standards.

(c) informing the IE / Authority locations of illegal dumping so as for levying of fine by the Authority.

(d) annually updating of the MIOP based on the ground level condition and performance information and other information with the objective of optimizing the project resource to achieve efficiency in capital requirement and operations.

(e) providing daily/ weekly/ monthly reports or as per the periodicity required by the IE/ Authority of the service performance and progress in the implementation of the MIOP.

(f) IEC and outreach activities in the Project Area, in line with the existing IEC guidelines, as agreed with and in collaboration with the Authority.

(g) the Concessionaire shall fulfil the following operational requirements, obligations, and commitments post COD:

i) the Concessionaire shall undertake periodic (at least once in a month) inspection of the Project assets in accordance with the maintenance schedule as approved in MIOP and shall submit reports of such inspection ("Inspection Reports") to the Authority and Independent Engineer.

ii) the Independent Engineer shall undertake periodic (at least once in a fortnight but once every week during monsoon) inspection of the Project jointly with the Authority representative to determine the condition of the Project including its compliance or otherwise with the MIOP and prepare Inspection Report.

iii) the Inspection Report shall set forth defects and deficiencies, if any, and may also require the Concessionaire to undertake such corrective action for the purpose of determining that the Project is at all times in conformity to achieve KPI standard as set out in this Agreement;

iv) the Concessionaire shall within 05 (five) days of the receipt of the Inspection Report from the Independent Engineer remedy the defects and deficiencies by maintaining the prescribed KPIs and undertake such services/ modifications/ retrofitting/ rehabilitation, if any, set forth thereon, without any delay and furnish compliance thereto and/or results thereof to the Independent Engineer along with a report (Inspection Compliance Report) in reasonable detail the measures, if any, that have been undertaken for curing the defects or deficiencies indicated in such results;

v) such inspection or submission of O&M Inspection Compliance Report by the Concessionaire shall not relieve or absolve the Concessionaire of its obligations and liabilities hereunder in any manner whatsoever.

vi) where the remedying of such defects or deficiencies in the service standards as per the KPIs/ operational requirements and undertaking such corrective actions is likely to take more than 05 (five) days as assessed by the IE, the Concessionaire shall submit the progress reports of such service improvement/ modifications/ retrofitting/ test every week till the remedy of such defects, within the period stipulated by the Authority in consultation with the IE;

D. Maintenance Manual

The Concessionaire shall in consultation with the Independent Engineer and the Authority evolve after approval of MIOP not later than 15 (fifteen) days before the Commercial Operation Date (COD), a manual for the regular and preventive maintenance (the "Maintenance Manual") and shall ensure and procure that at all times during the Concession Period, the Project is maintained in a manner that it complied with the Project requirement of meeting KPIs. Maintenance Manual which shall include but not be limited to the following:

(i) criteria to be adopted for deciding maintenance needs.
(ii) preventive maintenance schedule.
(iii) intervals at which the Concessionaire shall carry out periodic maintenance; and Intervals for major maintenance/ replacement.
(iv) maintenance shall include replacement of equipment components, consumables, repairs to structures & other civil works which are part of the Project Assets.
(v) the Concessionaire shall keep the Project Assets in a clean, rust free and tidy manner with regular washing and painting. It is further clarified that the no vehicle with rust &

weathered pain/ scratch on paint shall ply on the road.

E. Vehicle Breakdown and Accident

(i) In the case of unsafe conditions, vehicle breakdowns and accidents, the Concessionaire shall follow the relevant operating procedures, which shall include hazard lights as well as the removal of obstruction including Solid Waste expeditiously. Such procedures shall be in accordance with Applicable Laws, Applicable Permits and as per the provisions of this Agreement.

(ii) The Concessionaire shall ensure that any diversion or interruption of traffic is remedied without delay. The Concessionaire's responsibility for rescue operations on the Project shall be limited to the removal of vehicles or debris or any other obstruction, which may endanger or interrupt the smooth traffic flow.

F. Failure to meet Project Operation Requirements

The performance of the Concessionaire with respect to Project Operation Requirements (POR) shall be monitored and evaluated as per sub-Article 5.5 (A). In the event the Concessionaire has failed to operate and maintain the Project Facilities in accordance with the relevant KPI targets, the Concessionaire shall be levied penalty as per Schedule 26 of this Agreement.

G. Material Breach of Project Operation Requirements

The Concessionaire shall be deemed to be in material breach of Project Operation Requirements if the Independent Engineer receives intimation from the Authority and/ or acts on its own in accordance with the provisions of this Agreement, has determined Material Breach of Project Operation Requirements by the Concessionaire.

H. Authority's rights

Upon occurrence of a material breach of POR, the Authority shall, without prejudice to and notwithstanding any other consequences provided therefore under this Agreement, be entitled to terminate this Agreement

5.6 Insurance

A. Implementation Period and Concession Period

The Concessionaire shall at its cost and expense, purchase and maintain by due re-instatement or otherwise insurance as necessary, but not limited to the following:

i) concessionaire's all risk Insurance.
ii) Motor Vehicle Insurance.
iii) comprehensive third-party liability insurance including injury or death to personnel representatives of Persons who may enter the Project Site, and Project Asset.
iv) workmen's compensation insurance.
v) loss, damage or destruction of the Project Assets, at replacement value,
vi) the Concessionaire's general liability arising out of the Concession.
vii) any other insurance that may be necessary to protect the Concessionaire, its employees and its

Assets against loss, damage, destruction, business interruption or loss of profit including insurance against all Force Majeure Events that are insurable.

B. Evidence of Insurance

The Concessionaire shall, from time to time, provide to the Authority and the IE copies of all insurance policies (or appropriate endorsements, certifications or other satisfactory evidence of insurance) obtained by the Concessionaire in accordance with this Agreement.

C. Validity of Insurance

The Concessionaire shall from time to time promptly pay insurance premium, keep the insurance policies in force and valid throughout the Concession Period and furnish copies thereof to the Authority. Each insurance policy shall provide that the same shall not be cancelled or terminated unless 10 Days' clear notice of cancellation is provided to the Authority in writing. If at any time the Concessionaire fails to obtain or maintain in full force and effect any and all of the insurance required under this Agreement, the Concessionaire shall be deemed to be in Material Breach of the Concession Agreement, and the Authority shall obtain and maintain such insurance and the sum incurred for the payment of the premium by the Authority therefore shall be deducted from the MCTC by the Authority along with a penalty of 50 (fifty) percent of the value of the insurance premium paid.

D. Application of Insurance Proceeds

Subject to the provisions of the Financing Documents and unless otherwise provided herein, the proceeds of all insurance policies received shall be promptly applied by the Concessionaire towards repair, renovation, restoration or re-instatement of the Project Assets or any part thereof which may have been damaged or destroyed. The Concessionaire may designate the Lender as the loss payees under the insurance policies or assign the insurance policies in their favour as security for the financial assistance provided by them to the Project. The Concessionaire shall carry out such repair, renovation, restoration or re-instatement to the extent possible in such manner that the Project Assets after such repair, renovation, restoration or re-instatement be as far as possible in the same condition as it were prior to such damage or destruction and except normal wear and tear.

E. Un-insurable Risks

If during the Concession Period, any risk which has been previously insured becomes un-insurable due to the fact that the insurers have ceased to insure such a risk and therefore insurance cannot be maintained/re- instated in respect of such risk, the Concessionaire shall not be deemed to be in breach of its obligations regarding insurance under this Agreement.

5.7 Shareholding

5.7.1 In case of single entity being the successful bidder, and appointed as the Concessionaire following due process, shall hold 100% (one hundred per cent) shareholding in the paid-up equity capital of the Concessionaire until the expiration of 3 (third) year from COD and subsequent to the lock in

period of three years the entity shall hold at least 51% (fifty- one per cent) shareholding in the paid-up equity capital until expiration of 10 (ten)[1] years from COD.

5.7.2 In case the Concessionaire is a Consortium of entities and appointed as the Concessionaire following due process, the entities shall maintain the shareholding in the paid-up equity capital of the concessionaire as per the table below:-

S.No	Year from COD	Total Shareholding to be held by the Consortium	Balance Shareholding which can be held by entity outside consortium	Minimum Shareholding of the Members of the Consortium2			Cumulative shareholding of consortium members should be:
				Technical (a)	Financial (b)	Other (c)	(d=a+b+c)
1	0-3	100%	-	51%	26%	-	100%
2	4-10	51%	49%	26%	-	-	51[3]%

5.7.3 Any violation in the shareholding pattern in the equity lock-in requirements would be treated as Concessionaire Event of Default and automatically the Agreement shall become null & void and in such case the Authority shall act as per Article 13.

5.7.4 In case the Technical Member is being substituted with the equally competent[4], the Authority's decision shall be deemed final[5].

5.8 General Obligations

The Concessionaire shall at their own cost and expense:

(a) investigate, study, design, construct, operate, retrofit, rehabilitate and maintain the Project Assets in accordance with the provisions hereof;
(b) obtain all Applicable Permits as required by or under the Applicable Law and ensure compliance thereof at all times during the Concession Period;
(c) submit MIOP as per Schedule 19 and obtain approval from the Authority in accordance with sub-Article 5.3 of this Concession Agreement;
(d) Shall achieve Financial Closure as per the sub-Article 2.5 of this Concession Agreement.
(e) comply with Applicable Law governing the operations of the Project Assets, as the case may be, at all times during the Concession Period.
(f) procure and maintain in full force and effect, as necessary, appropriate proprietary rights, licenses, agreements and permissions for materials, methods, processes and systems used in or incorporated into the Project.

1 4th (four) years to 10th (ten) years.
2 The Shareholders are allowed to buy the equity of other shareholder(s) but shall maintain the minimum shareholding.
3 The Shareholder shall maintain this minimum equity throughout the concession period of 4 to 10 years.
4 Must meet the Technical Qualification as stated in the Volume-I, sub-Article 3.6.1
5 The Authority shall seek opinion from the CEO or COO of the Tamil Nadu Infrastructure Board.

(g) deleted

(h) deleted

(i) make efforts to maintain harmony and good industrial relations among the personnel employed in connection with the performance of its obligations under this Agreement and shall be solely responsible for compliance with all labour laws and solely liable for all possible claims and employment related liabilities of its staff employed in relation with the Project and hereby indemnifies the Authority against any claims, damages, expenses or losses in this regard and that in no case and shall for no purpose shall the Authority be treated as employer in this regard;

(j) be responsible for all the health, security, environment and safety aspects of the Project Assets, as the case may be, at all times during the Concession Period.

(k) be responsible for the operation and maintenance of Authority's Movable Assets and shall indemnify the Authority from any legal obligations arising during the Concession Period.

(l) ensure that the Waste to Wealth Centres, Command Control Centre, Secondary Collection Points (RC Bin locations), Workshops, vehicle parking sites, BoV parking locations, attendance location shall remain free from all encroachments and take all steps necessary to remove encroachments, if any.

(m) upon receipt of a request thereof, afford access to the Project Assets to the authorized representatives of the Authority for the purpose of ascertaining compliance with the terms, covenants and conditions of this Agreement and to any Government Agency having jurisdiction over the Project, including those concerned with safety, security or environmental protection to inspect the Project Assets and to investigate any matter within their Authority and upon reasonable notice, the Concessionaire shall provide to such persons assistance reasonably required to carry out their respective duties and functions;

(n) pay all taxes, fees, fine, penalty, duties and outgoings, including utility charges relating to the Project Assets, as applicable throughout the Concession Period except Property Tax on Secondary Collection points, DHW Centres, Workshops and Parking Sites which shall be borne by the Authority.

(o) make its own arrangements for the engagement of the employees and labour engaged for operating the Project following applicable laws on minimum wages and other employee benefit schemes.

(p) keep in the registered office of the SPV, two complete sets of this Agreement, approvals given by the Authority/ Independent Engineer and any other communication given or issued under provisions hereof for inspection, verification and use by the Authority or any Authority authorized by law to inspect the same or any of them;

(q) provide and maintain all necessary welfare facilities, as per the applicable labour laws, for its staff and labour. The Concessionaire shall not permit any of its employees to maintain any temporary or permanent living quarters within the structures forming a part of the Waste to Wealth centres, Command Control Centre, Secondary Collection points, Workshops and Parking sites.

(r) employ adequate number of appropriately qualified, skilled and experienced persons in order to

execute the Project;

(s) take reasonable precautions to prevent any unlawful, riotous or disorderly conduct by or amongst its staff and labour and to preserve peace and protection of persons and property in the neighbourhood.

(t) during the occurrence of Disasters, the Concessionaire shall follow the Disaster Management Plan as per the approved MIOP;

(u) the Concessionaire shall deploy one light motor vehicle in each zone, having capacity to carry 2 (two) metric tons, for lifting and transportation of carcasses to the designated facility/ site;

(v) the Concessionaire shall within 200 (two hundred) days from the Commencement Date ensure commencement of Commercial Operations**:**

(i) make necessary procurements and mobilize requisite collection and transportation infrastructure and produce documents evidencing the same.

(ii) employ manpower required as per the Schedule 16 of this Agreement.

(iii) takeover project sites and facilities from the Authority.

(iv) roll out full scale operations in areas taken over from the Authority as per MIOP including the roll out of KPI based monitoring and evaluation.

(w) Environmental Health and Safety Plan

(i) the Concessionaire shall comply with the provisions of this Agreement, applicable laws and applicable permits and conform to Good Industry Practice for securing the safe operation of the Project.

(ii) the Concessionaire shall comply with the safety requirements set forth in Schedule 9 of this Agreement.

(iii) the Independent Engineer shall carry out health and safety audit of the Project Assets and Project Manpower once in a month in accordance with the Safety Requirements and shall take all other actions necessary for securing compliance with the safety requirements at all times.

(x) Submission of Financial Statement:

(i) the Concessionaire on a quarterly basis, shall submit Balance Sheet statement, Profit & Loss Account statement, Cash Flow Statement and any other statement as desired by the Authority.

(ii) on quarterly basis, the Concessionaire shall submit to the Authority the consolidated statement of Provident Fund deposited and ESI deposited.

5.9 No Breach of Obligations

The Concessionaire shall not be considered to be in breach of its obligations under this Agreement nor shall it incur or suffer any liability if and to the extent performance of any of its obligations under this Agreement is affected by or on account of any of the following:

a) Force Majeure Event, subject to sub-Article 12.5(b);

b) Authority's Event of Default.

c) Compliance with the instructions of the Authority or the directions of any Government Agency;

other than instructions issued as a consequence of breach of any its obligations by the Concessionaire of any hereunder.

d) Closure of the Project Facilities or part thereof with the approval of the Authority.

e) Concessionaire's inability to remove any disaster debris despite prompt steps having been taken by the Concessionaire in that regard in spite of best efforts taken by the concessionaire in conformity with disaster management framework.

f) Concessionaire's inability to remove any accident debris due to non- completion of any police / insurance related inquiry/survey despite prompt steps having been taken by the Concessionaire in that regard.

6. Article 6: Authority's Obligations

In addition to and not in derogation or substitution of any of its other obligations under this Agreement, the Authority shall have the following obligations:

6.1 Specific obligations

The Authority shall endeavor to grant in a timely manner all such approvals, permissions, and authorizations which the Concessionaire may require or is obliged to seek from the Authority in connection with implementation of the Project and the performance of its obligations, under this Agreement. The Authority shall not seek any compensation or levy penalty or send any notice thereof to the Concessionaire for such delay.

6.2 General obligations

The Authority shall:

a) At the Commencement Date the Authority shall appoint a project nodal not less than the rank of Superintending Engineer who shall coordinate with the concessionaire and IE for sharing of data, approval of MIOP, acknowledging & responding to mails of the Concessionaire, arranging meeting with various departments/ officials, clearance of the payments, review of the KPIs, creating proceedings with IE, managing data center including all the activities incidental to implementing the project.

b) ensure peaceful use of the Project Site by the Concessionaire under and in accordance with the provisions of this Agreement without any let or hindrance from the Authority or any Governmental Agency or persons claiming through or under it/them;

c) allocate and provide within 45 (forty-five) days from the Commencement Date for the following:

   i) Command Control Centre inclusive of Call Center and Data Control Room.

   ii) Locations for DHW Centers as specified in the approved MIOP.

   iii) Parking Sheds, garages, workshops, and Waste to Wealth Centers as specified in Schedule 3&4.

   iv) office space for IE as specified in Schedule 23.

   v) convenient locations for installation of biometric attendance systems in beat offices or any other location at the ward level.

   vi) Locations for the static compactors.

   vii) Progressive physical asset handover plan to the concessionaire.

   viii) Shall ensure that weighbridge & CCTV camera is functional all the time in MCC, MRF and RRC, other processing facilities maintained by the Authority/Authority's contractor.

   ix) Shall provide all weather access road till the tipping point.

   x) Share the list of the decentralized units including locations and expected weekly quantum of reject & residue to be transported by the concessionaire to final deposition center;

d) make arrangements with TNPCB to ensure that DHW is collected from the DHW Depositing Centers and transported to the TNPCB designated disposal facility/ site;

e) upon written request from the Concessionaire, assist the Concessionaire in obtaining access to all necessary infrastructure facilities and utilities, including water, electricity and telecommunication facilities where the Concessionaire shall bear the cost involved.

f) if required, assist in obtaining police assistance against payment of prescribed costs and charges, if any, for traffic regulation, patrolling and provision of security on the Project Site/Project Facilities and implementing this Agreement in accordance with the provisions hereof;

g) if requested by the Concessionaire, assist the Concessionaire in obtaining vehicle registration against payment of prescribed costs and charges, if any, for implementing this Agreement in accordance with the provisions hereof;

h) observe and comply with all its obligations set forth in this Agreement;

i) hand over the physical possession of Project Site together with existing infrastructure/ structure connected to this Project to the Concessionaire whenever required during the Handing Over phase free from any encumbrances;

j) grant or where appropriate provide necessary assistance to the Concessionaire in securing Applicable Permits;

k) employ Independent Engineer for monitoring the Project Operation as per terms of the Concession Agreement during the Concession Period. The costs and expenses of the IE shall be borne in accordance with sub-Article 4.2 and sub-Article 4.3 of Vol II A;

l) provide all assistance to the Concessionaire, if required, for placement of Bins at required locations in the Project Area in accordance with approved MIOP;

m) provide space for the parking of e-Rickshaws as per approved MIOP at locations subject to the availability;

n) shall not issue any directive either orally or in writing to the Concessionaire which shall lead to Change in Scope unless until the Change in Scope agreed between the Parties;

o) ensure that no barriers are erected or placed by the Authority or any Governmental Agency on the Project Site, except by mutual agreement or on account of any law-and-order situation or upon national security considerations;

p) The Authority shall enter into an Escrow Agreement within 15 (fifteen) days from the Commencement Date with the Concessionaire, as per the format prescribed in Schedule 24;

q) The Authority shall deposit an amount equal to two months of Monthly Quote (Initial Escrow Amount) in the Escrow Account and shall replenish the Escrow Account, once the Initial Escrow Amount depletes to 50% (Fifty Percent) of the Initial Escrow Amount or the Authority receives intimation for replenishment of fund from the Escrow Agent subject to the condition that the replenished Escrow Amount shall not exceed the value of two months of applicable MQ.

7. Article 7: Change of Scope

The Authority may, notwithstanding anything to the contrary contained in this Agreement but subject to sub-Article 7.1, requires the Concessionaire to make alterations/ modifications in the Scope of the Project (the "Change of Scope")[6], so any such Change of Scope shall be made in accordance with the provisions of this Article and the costs thereof shall be expended by the Concessionaire and reimbursed to the Concessionaire by the Authority in accordance with sub-Articles 7.3 and 7.4

7.1 Change of Scope

(i) any change in the Project Area – like addition or deletion of certain wards either before CoD or after CoD; and/or

(ii) omission of any work from the Scope of Work (Schedule-1) of the Project; provided that the Authority shall not omit any work under this Clause in order to get it executed by any other person or by itself; and / or

(iii) any additional works or services which are not included in the Scope of Work (Schedule-1), including any associated KPI(s) as per this Agreement; and/or

(iv) fixing / installing certain equipment like bins, stationary compactors etc; and/ or

(v) giving temporary services or one time service during emergency or festival or special events (any event) outside Project Area;

7.2 Procedure for Change of Scope

(a) In the event of the Authority determining that a Change of Scope is necessary, it shall issue to the Concessionaire a notice (the "Change in Scope Notice") only in writing specifying in detail the works and services contemplated thereunder.

(b) If the Concessionaire determines at any time that a Change of Scope is necessary, it shall by notice in writing require the Authority to consider such Change of Scope (the "Change of Scope Request"). The Authority shall, within 30 (thirty) days of receipt of such notice, either accept such Change of Scope with modifications, if any, and initiate proceedings therefore in accordance with this Article or inform the Concessionaire in writing of its reasons for not accepting such Change of Scope Request.

(c) The notice issued by the Authority under (a) above or the acceptance by the Authority under (b) above, as the case may be, shall be considered as the notice of change of Scope (the "Change of Scope Notice").

(d) Upon receipt of a Change of Scope Notice, the Concessionaire shall, with due diligence, provide to the Authority such information as is necessary, together with detailed documentation in support of:

(i) the impact, if any, which the Change of Scope is likely to have on the Project; and

(ii) the options for implementing the proposed Change of Scope and the effect, if any, each such option would have on the costs and time thereof, including a detailed breakdown by work classifications specifying the equipment and labor costs calculated in accordance with the

[6] From the Commencement Date

schedule of rates[7] applicable to the works assigned by the Authority to its contractors, along with the proposed premium/discount on such rates; provided that the cost incurred by the Concessionaire in providing such information shall be reimbursed by the Authority to the extent such cost is certified by the Independent Engineer as reasonable.

(e) Upon receipt of information set forth in (d) above, if the Authority decides to proceed with the Change of Scope, it shall convey its preferred option to the Concessionaire, and the Parties shall, with assistance of the Independent Engineer, thereupon make good faith efforts to agree upon the time and costs for implementation thereof. Upon reaching an agreement, the Authority shall issue an order (the" Change of Scope Order") requiring the Concessionaire to proceed with the performance thereof.

(f) The Authority shall, on receipt of a Change of Scope Request from the Concessionaire, within 15 (fifteen) days of receipt of such proposal require the Concessionaire to provide all such information within (seven) days as would be required by the Authority to finalize its decision with regard to the approval or rejection to the Change of Scope Request and upon consideration of the same, either accept such Change of Scope Request with modifications, if any, as deemed necessary by the Authority (the "Change of Scope Acceptance") or reject the Change of Scope Request and inform the Concessionaire of its decision. It is also agreed between the Parties that the Authority shall not be liable, in any manner whatsoever, on account of grant or rejection of such Change of Scope Request.

7.3 Framework for Change of Scope

(I) The Authority shall issue the Change of Scope Notice to the Concessionaire through the Independent Engineer.

(II) Upon receipt of Change of Scope Notice from the Authority, the Concessionaire shall, within a period of 07 (seven) days, provide to the Independent Engineer such information as is necessary and reasonable together with preliminary documentation in support of the following:

A. If new services added or services reduced in the Scope of Work then:

(i) The impact which the change in the Scope of Work is likely to have on the services delivery / Project Operation as per MIOP;

(ii) Independent Engineer shall review the information provided by the Concessionaire, determine the addition / reduction in cost to the Concessionaire as a result of such Change of Scope. The Independent Engineer shall communicate its recommendation to the Authority within a period of 07 (Seven) days from the receipt of information from the Concessionaire, but not later than 15 (fifteen) days from the date of receipt of Change of Scope notice from the Authority.

(iii) The Authority shall issue the Change of Scope Order within a reasonable period from the date of receipt of the recommendation made by the Independent Engineer in accordance with preceding sub-article (ii) above or it may reject the Independent Engineer recommendation.

[7] In case the item is not covered in the schedule of rates then the last tender rate of similar nature or GEM portal rate (average of three lower rates) or the market rate shall be relied upon.

(iv) On receipt of Change of Scope order issued by the Authority, the Concessionaire shall implement the takeover of expanded area or the handed back area as per the schedule detailed in MIOP and implement the KPI as per the schedule approved in the MIOP.

(v) Parties agrees that the revised IAQ/ MQ shall be computed by the IE and agreed by the Parties shall not exceed 25% (Twenty five percent) of the prevailing IAQ/MQ.

(vi) Parties agrees that during such changes, the Concessionaire shall fulfill the requirements on part with approved MIOP within 30 (thirty) days and subsequent default beyond 30th day shall be termed as Concessionaire Event of Default.

B. Change in limit of the Project Area: expanded/ increased or reduced / decreased

(a) As the case may be the change of the Project Area shall not exceed 25% (twenty-five percent) of the initial Project Area[8];

(b) The concessionaire shall prepare a new MIOP of the Changed Project Area keeping the then prevailing Scope of Work and shall prepare the "Impact Note" detailing the services delivery / Project Operation for such Change in Scope;

(c) Independent Engineer shall review the information provided by the Concessionaire, determine the increase / decrease in IAQ/MQ (Revised IAQ) to the Concessionaire as a result of such Change of Scope. The Independent Engineer shall communicate its recommendation to the Authority within a period of 07(Seven) days from the receipt of information from the Concessionaire, but not later than 15 (fifteen) days from the date of receipt of Change of Scope notice from the Authority.

(d) The Authority shall issue the Change of Scope Order within a reasonable period from the date of receipt of the recommendation[9] made by the Independent Engineer in accordance with preceding sub-article (c) above or it may reject the Independent Engineer recommendation.

(e) On receipt of Change of Scope order issued by the Authority, the Concessionaire shall implement the takeover of expanded area or the hand back the reduced area as per the schedule detailed in MIOP[10] and implement the KPI as per the schedule approved in the MIOP.

(f) Parties agrees that the revised IAQ/ MQ shall be equal to ABPRR multiplied by the revised Project Area where the ABPRR shall be applicable as per the prevailing MQ/IAQ.

(g) Parties agrees that during such changes, the KPI shall be suspended for continuous 60 (sixty) days, the concessionaire shall be paid flat 95% (ninety five percent) of applicable MQ. It is further added that if the concessionaire fails to implement KPI on 60th day, the concessionaire shall be paid 90% (Ninety percent) of MQ for the

[8] At the time of signing of the Concession Agreement

[9] Such recommendations shall be made along with the MIOP.

[10] The Concessionaire shall prepare a MIOP for change in Project Area.

subsequent period of 61st day to 90th day, and subsequent default beyond 90th day shall be termed as Concessionaire Event of Default.

C. For services like fixing / installing certain equipment like bin, stationary compactors etc; and giving temporary services or one time service during emergency or festival or special events (any event) outside Project Area;

(a) Upon receipt of Change in Scope, the concessionaire shall prepare the cost proposal of service or goods to be offered at the fair market price and the Concessionaire's proposal shall be evaluated as per the procedure laid out as per the Clause 7.2 (d) (ii) above.

(b) After execution of such services or supply of goods the Authority shall issue the Completion Certificate and make payment to the Concessionaire within 30 (thirty) days from the date of issuance of such completion certificate. It is further clarified that there shall not be any rebasing of IAQ/MQ and such payment shall not be considered as apex value limit of 25% of the IAQ.

7.4 Computation and Restrictions

(a) Notwithstanding anything to the contrary contained in this Article, the cumulative costs relating to all the Change of Scope Orders except 7.3 (C), shall not exceed 25% (Twenty five per cent) of the Residual Project Cost. The methodology of computation of the Residual Project Cost shall be:

Example Purpose Only

S.No.	Heads	Unit	Value
1.	Project Period	Years	10.00
2.	Change of Scope order issued in years	Years	3
3.	Residual Project Period	Years	7
4.	Prevailing Annual Quote (MQ)	Rs Crs	125.00
5.	Residual Project Cost	Rs Crs	875.00
6.	Apex value of "Change in Scope" for residual project period (=875.00*25%)	Rs Crs	218.75
7.	Apex additional cost that can be allowed (25%) i.e. which can be added in IAQ (=218/7)	Rs Cr	31.25
8.	Maximum limit of Escalation of IAQ	Rs Cr.	156.25

(b) The Concessionaire may, in its sole discretion, accept or reject any Change of Scope Order, without assigning any reason whatsoever. However, in case the Concessionaire decides to take up the Change of Scope works, it shall proceed with the same within such timelines as agreed between the Parties in MIOP for the clause except sub-Article 7.3 (C).

(c) For the avoidance of doubt, the Parties agree that no Change of Scope shall be executed unless the Authority has issued the Change of Scope Order or a Change of Scope Acceptance, as the case may be, save and except any works necessary for meeting any Emergency.

7.5 Power of the Authority to undertake works

In the event the Parties are unable to agree to the proposed Change of Scope in accordance with sub Article 7.2 the Authority may, after giving notice to the Concessionaire and considering its reply thereto, award the works or services, contemplated under the sub Article 7.2, to any person on the basis of open competitive bidding; provided that the Concessionaire shall be barred from taking part in this bidding process or shall provide such services or supply of goods in the Project Area by itself provided those new services does not create any hardship to the Concessionaire. Parties also agree that the Concessionaire shall provide assistance and cooperation to the Selected Entity/ Authority who undertakes the works or services thereunder but shall not be responsible for rectification of any defects and/ or maintenance of those supplied goods or services carried out by the selected entity/ Authority.

8. Article 8: Monitoring, Performance Evaluation and Payment

8.1 Monitoring of Activities

(A) From Commencement Date to full COD

a) Progress Reports: After the Commencement Date, the Concessionaire shall, on every 7th (seven) day furnish Progress Reports till COD having such relevant information as may be required by the Authority/ Independent Engineer and applicable as per the Concession Agreement. The Concessionaire shall also submit detailed mobilization and resource deployment schedule for Solid Waste Collection and Transportation infrastructure, which was proposed to be used during implementation of project. The schedule shall have clear resource delivery and deployment milestones, against which the monitoring of project phase shall be undertaken by the Independent Engineer appointed by the Authority, and the same shall be in conformity with MIOP.

b) Review and Inspection: From the Commencement Date to COD the Independent Engineer shall review and inspect at least once in a week and make a report of such review and inspection stating in reasonable detail the defects or deficiencies, if any, with particular reference to the MIOP or Good Industry Practice. All mobilized and deployed assets and infrastructure shall be inspected by the Independent Engineer and progress related to same shall be reported on weekly basis. It shall send a copy of the Inspection Report to the Authority and the Concessionaire within 24 (twenty-four) hours of such inspection and upon receipt thereof, the Concessionaire shall rectify and remedy the defects or deficiencies, if any, stated in the report. Such inspection or submission of the Inspection Report by the Independent Engineer shall not relieve or absolve the Concessionaire of its obligations and liabilities hereunder in any manner whatsoever. The Authority may inspect and review the progress of all the project activities during this period.

c) Quality of Assets and Workers: The Concessionaire shall ensure that the Movable/ Immovable Asset and Workmen are in accordance with the requirements specified in this Agreement, and Good Industry Practice respectively.

d) The Concessionaire shall, within 30 (thirty) days of the Commencement Date, submit to the Independent Engineer as well as Authority its draft MIOP including Quality Assurance Plan.

e) Methodology: The Concessionaire shall, at least 15 (fifteen) days prior to the commencement of initiation of COD of the Project, submit to the Authority and IE, the methodology of deployment of infrastructure along with their technical specifications as per the approved MIOP.

f) Inspection and technical audit by the Authority: The Authority shall have the right to inspect and review the progress and quality of the Equipment/ Assets and issue appropriate directions to the Concessionaire and the IE for taking remedial action in the event the Assets are not in accordance with the provisions of this Agreement.

g) Inspection of Concessionaire Records: The Authority shall have the right to inspect the records of the Concessionaire relating to the Assets and Project Facility.

h) Submissions: The Concessionaire shall submit the manufacturers manual of Movable Assets

and relevant information to the Independent Engineer.

i) Tests: The Independent Engineer shall require the Concessionaire to carry out or cause to be carried out tests of the IT infrastructure, static compactors and command and control centre in such a manner as specified in the approved MIOP and as the case may be the Authority's representative may be present. The results of such test shall be shared by the IE with the Authority and the Concessionaire.

j) In the event that results of any tests conducted under this Article 8 establish any defects or deficiencies, the Concessionaire shall be responsible to carry out remedial measures and furnish a report to the Authority (and IE). For the avoidance of doubt, the cost of such tests and remedial measures including replacement of defective equipment/ components/ parts thereof shall be solely borne by the Concessionaire.

k) Rejection: If, as a result of an inspection or testing, any deficiency with respect to the provisions of this Agreement is found, IE with the approval of the Authority shall reject the equipment or apparatus by giving notice to the Concessionaire. The Concessionaire shall then promptly rectify those defects and ensure that the rectified item (if necessary, rectification may include replacement also) complies with the requirements of this Agreement and get approval of the Authority.

(B) <u>After Achieving Full COD</u>

(a) The progress reports shall be submitted as per the approved MIOP to the Authority/ IE in the prescribed format as specified in the MIS module.

(b) Quality of Assets and Workers: The Concessionaire shall ensure that the Movable/ Immovable Asset and Workmen are in accordance with the requirements specified in this Agreement, Technical Specifications and Good Industry Practice.

(c) Inspection and technical audit by the Authority :

The Authority shall have the right to inspect and review the progress and quality of the Assets and issue appropriate directions to the Concessionaire and the IE for taking remedial action in the event the Assets are not in accordance with the provisions of this Agreement.

(d) Inspection of Concessionaire Records

The Authority shall have the right to inspect the records of the Concessionaire relating to the Assets and Project Facility.

(e) Tests for equipment: The Independent Engineer shall require the Concessionaire to carry out or cause to be carried out tests once in a year or as deemed necessary, and in such manner as specified by the IE with the approval of the Authority, and in accordance with Good Industry Practice for quality assurance. The results of such test shall be shared with the Authority and IE.

(f) In the event that results of any tests conducted under this Article 8 establish any defects or deficiencies, the Concessionaire shall be responsible to carry out remedial measures and furnish a report to the Authority (and IE). For the avoidance of doubt, the cost of such tests and remedial measures including replacement of defective

equipment/ components/ parts thereof shall be solely borne by the Concessionaire.

(g) Rejection: If, as a result of an inspection or testing, any deficiency with respect to the provisions of this Agreement is found, IE with the approval of the Authority shall reject the equipment or apparatus by giving notice to the Concessionaire. The Concessionaire shall then promptly rectify those defects and ensure that the rectified item (if necessary, rectification may include replacement also) complies with the requirements of this Agreement and get approval of the Authority.

(h) Examination of Waste before Disposing: In respect of the Solid Waste which the Independent Engineer is entitled to examine, inspect, measure and/or test before it is disposed of or supplied to decentralized or centralized unit, the Authority and the Independent Engineer shall then either carry out the examination, inspection or testing without informing the Concessionaire. It is further clarified that IE and Authority shall do examination without any notice.

8.2 Performance Evaluation

The IE shall undertake performance evaluation as per the Key Performance Indicators (KPIs) described in Schedule 26, as following:

(a) the monitoring frequency shall be continuous, and the hotspot identified in MIOP shall be monitored and physically verified on the daily basis or as per the frequency mentioned in MIOP;

(b) the IE shall prepare and submit a daily consolidated report of KPI targets achievement related to services delivered by the Concessionaire.

(c) the Authority reserves the right to evaluate compliance to the Key Performance Indicators on its own and shall direct the IE for corrective action order and shall compute the enforcement of penalty thereon.

8.3 Initial Annual Quote (IAQ)

Parties agree that:

(a) IAQ as per the Schedule 26 is the cost of the services to be delivered by the Concessionaire in the first year in compliance to the various provisions of this Concession Agreement and the Concessionaire unconditionally agreed for Rupees ……. Crores as Initial Annual Quote (IAQ) as per the Schedule-27;

(b) the accepted IAQ of the Concessionaire shall be divided by 12 (twelve) to arrive at the Monthly Quote (MQ);

(c) the subsequent revision of the IAQ shall be called Revised Annual Quote (RAQ) which shall be computed as per the methodology detailed in the sub-Article 8.5;

(d) The first rebasing of the MQ shall be carried out on the day of "Notice to Takeover" and the "Notice to Take Over" shall clearly specify the revised MQ and ABPRR;

(e) the ABPRR computation shall be on the 100% (hundred percent) of the revised MQ;

(f) once the take-over of the Project Area is complete then the IE shall recommend for issuance of

the COD certificate indicating the applicable MQ[11] as per the provision detailed in sub-Article 8.3 (g);

(g) during the subsistence period of "Takeover Date to COD " the MQ as specified in the notice to takeover shall be applicable and the concessionaire shall be paid only 90% (ninety percent) of the applicable MQ during "Takeover Date to COD" as indicated in Schedule-5 column (C) of Volume II (B) of this Agreement;

(h) If the COD is achieved after 5th (fifth) day of the calendar month then in that calendar month shall not be considered for rebasing, *for example if the COD is achieved on 6th of April, then the rebasing of MQ shall be performed in the month of June for the month of May;* and

(i) 50% (fifty percent) of MQ shall be Fixed Payment (FP) and remaining 50% (Fifty percent) of MQ shall be Performance based Payment (PP).

8.4 Quote Applicability

Parties agrees that the IAQ, shall remain valid till the "Notice to Takeover" and subsequently the monthly rebasing of RAQ shall be done as per the sub-Article 8.5.

8.5 Rebasing Mechanism

l) The Parties agrees to rebase the MQ by way of following framework and steps:

Step-1: The Initial Annual Quote (IAQ), shall be converted to Monthly Quote as per the sub-Article 8.3 (b) and thus, obtained value shall be termed as T_0.

Step-2: The T_0 shall be divided into Fixed Component (F) and Initial Variable Component as per the following formula.

$T_0 = F + V_0$

Where:

T_0 = The Initial Monthly Quote.

F = Fixed component and the value shall be 20% of T_0 which shall remain constant throughout the project period[12].

V_0 = Initial Variable component, which shall be rebased as per the formula below. The initial value of V_0 shall be 80% of T_0.

Step-3: The V_0 shall be further divided as per the following formula:

V_0 = 80% as manpower weight (M_0) +10% as diesel weight (D_0) +10% as WPI weight (W_0)

M_0 = Initial Manpower sub-component in MQ on the date of start of taking over of the project area

D_0 = Initial diesel sub-component in MQ on the date of start of taking over of the project area

W_0 = Initial inflation sub-component in MQ on the date of start of taking over of the project area

Step-4: The rebasing of M_0 shall done based on the weighted average increase or decrease in the minimum wages of Driver and Sanitary worker. The first rebasing shall be done between the weighted

[11] In case due to public resistance the full takeover of the project area could not be completed, then in such case the MQ shall be computed based on ABPRR formula and the declared MQ shall be incorporated in the COD certificate issued by the Authority. It is further clarified that in case the after achieving COD the area has been handed over to the concessionaire the addition in value of MQ shall be computed as per the ABPRR based on the prevailing MQ.

12 The project period shall mean the period starting from the Takeover date to Expiration or Termination Date of the Project.

average changes of manpower value in T_0. The second change shall consider the value of M_1 to be changed. The rebasing shall be based on the following formula:

M_1 = M_0 x (1+Weigted Average change in Manpower Rate)

Step-5: The rebasing in D_0 shall done based on the monthly moving average increase or decrease in the diesel rate. The first rebasing shall be based on change in diesel price from the bid due date to the start of taking over of the project area. The subsequent rebasing shall be based on the monthly moving average of that particular month. The rebasing shall be based on the following formula:

D_1 = D_0 x (1+ percentage increase or decrease in rate)

Step-6: The rebasing in W_0 shall done based on the quarterly increase or decrease in the WPI index. The first increase shall be percentage change in index from the bid due date to start of taking over of the project area. It is clarified that in subsequent increase or decrease the previous Quarter index shall be relied upon. The rebasing shall be based on the following formula:

W_1= W_0 x (1+ percentage increase or decrease in Index)

Step-7: The rebased value shall be as follows:

T_1 **= F +M_1 +D_1 + W_1**

EXAMPLE

A. *Determination of Monthly Quote (MQ)*

The Monthly Quote shall be computed by dividing the IAQ by 12.

Example Table: Computation of Monthly Quote

Initial Annual Quote	Rs crs	10.00
Initial Annual Quote	Rs Lacs	1,000.00
Monthly Quote (T_0)	Rs Lacs	83.33

B. *Determination* of Fixed component and initial Variable components (date of start of Taking Over of the Project Site)

The MQ shall be further divided into Fixed Component (F) and Initial Variable Component (IVC). The following formula captures the

T_o= F + V_0

Where:

T_0 = The Initial Monthly Quote

F = Fixed component (which shall remain constant throughout the concession period). The value shall be 20% of T_0.

V_0 = Initial Variable component, which shall be rebased as per the formula below. The initial value of V_0 shall be 80% of T_0.

The following formula shall be applied:

T_0= 0.20*T_0+0.80*T_0

Example Table: Calculation of fixed and variable component

Weightages			
Fixed [F]	20%	Rs Lacs	16.67
Variable [V_0]	80%	Rs Lacs	66.67

C. *Determination* of initial rebasing sub-components of Variable components (on the date of starting of the Project Area)

The variable sub-components shall be further subdivided.

M_0 = Initial Manpower sub-component in MQ on the date of start of taking over of the project area

D_0 = Initial diesel sub-component in MQ on the date of start of taking over of the project area

W_0 = Initial inflation sub-component in MQ on the date of start of taking over of the project area

The formula determination of Variable sub-component shall be as follows:

V_0 = 80% as manpower weight (M_0) +10% as diesel weight (D_0) +10% WPI weight (W_0)

Example Table: Calculation of subcomponents of variable component

Variable Weightage			
Manpower (M_0)	80%	Rs Lacs	53.33
Diesel (D_0)	10%	Rs Lacs	6.67
WPI/Inflation (W_0)	10%	Rs Lacs	6.67

D. *Initial* rebasing of IAQ at the date of start of taking over of the Project Area

The IAQ shall be rebased as per the following principle.

(i) The Fixed component (20% of IAQ) shall remain constant throughout the concession period.

(ii) The manpower sub-component (M_0) of Variable (V_0) shall be rebased as per the following principle. Following is an example:

(a) M_0 shall be rebased as per the following example:

Example Table: Number of manpower calculation

Manpower		
Driver	Nos	500.00
Sanitary Worker	Nos	1,500.00
White Collar worker[13]	Nos	150.00
Total worker	Nos	2,150.00

(b) The weighted average (in percentage terms) increase or decrease or no change in the manpower rate from the bid due date to start of taking of the Project Area date shall be computed as per the following example:

Example Table: Weighted Average Wage Rate Change[14]

Minimum Wages of Driver on bid due date (Dr_0)	Rs/Day	500.00

[13] The Concession Agreement number of manpower shall be relied upon. Then the ABPRR formula shall be computed accordingly.

14 Only the wage rate of Driver and the Sanitary worker as notified by the Authority .

Changed wage rate on the day of start of taking over (Dr_1)	Rs/Day	522.00
Percentage Increase in driver's wages [(Dr_1-Dr_0)/Dr_0]	**%**	**4.40%**
Minimum Wages of Sanitary worker on bid due date (Sw_0)	Rs/Day	300.00
Changed wage rate on the day of start of taking over (Sw_1)	Rs/Day	317.00
Percentage increase in sanitary worker's wage rate [(Sw_1-Sw_0)/Sw_0]	**%**	**5.67%**
Weighted average increase in M_0	%	5.35%

(c) The increase shall be computed as per the following example, represented in the following table: -

Example Table: Rebasing of Initial Manpower rate

Initial (M_0)	Rs Lacs	53.33
Revised Manpower component = M_1 [M_0 x (1+Weigted Average Increase in Manpower Rate)]	**Rs Lacs**	**56.19**

(iii) The diesel sub-component (D_0) of Variable (V_0) shall be rebased as per the following principle. Following is an example:

Example Table: Determination of % of diesel rise

Diesel Rebasing		
Diesel Price on the Bid Due Date (R_0)	Rs/Lit	90.00
Diesel Price on the day of start of taking over of the Project Area (R_1)	Rs/Lit	94.20
Percentage Increase in the diesel Rate [(R_1-R_0)/R_1]	**%**	**4.67%**

Example Table: Rebased diesel subcomponent

Initial Diesel sub-component value (D_0)	Rs Lacs	6.67
Rebased D_1 = D_0 x (1+ percentage increase in rate)	**Rs Lacs**	**6.98**

(iv) The WPI sub-component (W_0) of Variable (V_0) shall be rebased as per the following principle. Following is an example:

Example Table: Determination of percentage change in WPI

WPI Rebasing		
WPI Index on the date of Bid (Wp_0)	Nos	118.00
WPI Index on the date of taking over (Wp_1)	Nos	122.00
Percentage increase in WPI [(Wp_1-Wp_0)/Wp_0]	**%**	**3.39%**

Example Table: Rebased WPI sub-component

Initial WPI sub-component on the bid due date (W_0)	Rs Lacs	6.67
Rebased WPI subcomponent = W_1	Rs Lacs	6.89

E. The rebased Monthly Quote example is being captured in the following table:

Example Table: Rebased Monthly Quote (MQ)

Rebased MQ		
Fixed Component (F)	Rs Lacs	16.67
Rebased Manpower Component (M_1)	Rs Lacs	56.19
Rebased Diesel Component (D_1)	Rs Lacs	6.98
Rebased WPI Component (W_1)	Rs Lacs	6.89
MQ at the time of taking over	**Rs Lacs**	**86.72**

F. The subsequent rebasing example is being captured in the following table:

Example Table: Next Rebasing methodology

Subsequent Rebasing		
Manpower Rebasing		
Driver	Nos	500.00
Sanitary Worker	Nos	1,500.00
White Collar worker	Nos	150.00
Total worker	Nos	2,150.00
Minimum Wages of Driver on taking over date	Rs/Day	522.00
Changed wage of Driver on the day of second rebasing	Rs/Day	546.00
Percentage Increase in wage	%	4.60%
Minimum Wages of Sanitary worker on first rebasing on taking over date	Rs/Day	317.00
Changed wage of Sanitary worker on the day of second rebasing	Rs/Day	339.00
Percentage Increase in wage		6.94%
Weighted average increase	%	6.35%
Manpower value in MQ at the time first rebasing	Rs Lacs	56.19
Revised Manpower value in MQ at the second rebasing	Rs Lacs	59.76
Diesel Rebasing		
Diesel Price on the day of taking of the Project Area	Rs/Lit	90.00
Diesel Price on the day of second rebasing	Rs/Lit	89.00
Percentage Increase	%	-1.11%
Value at the time of first rebasing	Rs Lacs	6.98

Subsequent Rebasing		
Value at the time of second rebasing	Rs Lacs	6.90
WPI Rebasing		
WPI Index on the date of Taking over	Nos	122.00
WPI Index on the date of rebasing	Nos	129.00
Percentage Increase	%	5.74%
Value at the time of first rebasing	Rs Lacs	6.89
Revised value at the second rebasing	Rs Lacs	7.29

Second Rebasing: M.Q. Value		
Fixed Component	Rs Lacs	16.67
Rebased Manpower Component	Rs Lacs	59.76
Rebased Diesel Component	Rs Lacs	6.90
Rebased WPI Component	Rs Lacs	7.29
MQ at the time of second rebasing	**Rs Lacs**	**90.61**

m) The process of rebasing shall be repeated so-on-so-forth for the subsequent rebasing. It is clarified following:

(a) In case the Concessionaire deploys CNG vehicles as well as the diesel vehicles, that in such case only the diesel cost variation shall be allowed.

(b) It is clarified that for subsequent rebasing, the previous values shall be adopted as the base value.

(c) For rebasing of:

(1) Diesel: Moving Average of the price of High-Speed Diesel (HSD) for Chennai for the previous month as notified by Indian Oil Corporation Limited. The daily price variation shall be relied upon;

(2) Sanitary Worker and Driver Wage Rate: Minimum Wages as notified by Chennai District Collector or by the Authority;

(3) Wholesale Price Index: The RBI Wholesale Price Index for Manufactured Products of the 1st day of the current financial quarter

(A) Rebasing Frequency:

The rebasing frequency for different components shall be as follows:

1. the frequency of diesel price rebasing shall be on a monthly basis during the Project Period as per the sub-Article 8.5 (A). The rebasing shall be computed by the IE and the revised MQ shall be only effective after the approval by the Authority;
2. the Minimum Wages shall be rebased as and when the notification of change in Minimum Wages by competent authority becomes effective and the Minimum

Wage component shall be rebased as per the sub-Article 8.5(A) within 90 days from the date of effectiveness of the notification. The rebasing shall be computed by the IE and shall be approved by the Authority. The Concessionaire shall pass on the wage revision benefits to the workers with immediate effect along with arrears and the Concessionaire shall submit documentary evidence of payment of minimum wages by attaching it to the Monthly Invoice of Fixed Payment.

3. the rebasing of WPI of Manufactured Products shall be done quarterly by IE on 1st day of every financial quarter (1st April 1st July 1st October and 1st January) as per the sub-Article 8.5(A). It is further clarified that if the contract is signed in the last month of any quarter the rebasing shall be effective on the 1st day of the subsequent quarter. The rebasing incidental to change in WPI of Manufactured Products shall be effective along with HSD price rebasing.
4. it is further clarified that any change in one or more of the components which leads to a rebased MQ lower than the Initial Monthly Quote shall be not applicable and the IMQ shall be applicable;
5. The authority warrants that all the rebasing shall be effective from the midnight of the day, as per the following table:

Sl. No.	Rebasing Component	Frequency	Rebasing Trigger Date
1.	HSD Rebasing	Monthly (Moving average of the month)	00:00 hours of the first day of every month with respect to the preceding month's moving average.
2.	Minimum Wages Rebasing	As the case may be (Annual)	Midnight of the date of effect of notification and computation to be carried out within 90 (ninety day) from the date of notification. The arrear shall be paid.
3.	WPI of Manufactured Products	Quarterly	Midnight of the First day of start of every quarter and to be done along with the HSD rebasing.

(B) All the MQ rebasing computation shall be done by the IE shall be shared with the Concessionaire after the approval from the Authority.

(C) In case of delay, on the part of the IE and Authority, in approval of Revised MQ, the Concessionaire shall be liable to receive arrears which shall be calculated from the date of rebasing trigger date of that rebasing component under consideration.

8.6 Penalties

(a) The performance of the Concessionaire will be evaluated daily as per the Key Performance Indicators (KPIs) described in Schedule 26.

(b) The Penalty, if applicable, shall be imposed on 50 % of the MQ or rebased MQ, whichever

applicable, as per the Penalty Slabs described in Schedule 26.

(c) The Penalty shall be calculated daily and the total amount at the end of each month shall be deducted from 50 % of the IMQ or rebased MQ, whichever is applicable, for that particular month.

(d) The amount of Penalty for each KPI shall be derived by the mechanism as specified in Schedule 26.

8.7 Surcharge on Penalty

(a) In case of the Concessionaire being in the same penalty slab, as per Schedule 26, for two consecutive months, a surcharge of 25 (twenty-five) percent shall be levied on the penalty rate for that specific KPI.

(b) In case of the Concessionaire being in the same penalty slab, as per Schedule 26, for three/ four/ …./ n consecutive months, a surcharge of 25 (twenty-five) percent shall be levied on the cumulative penalty rate of the second/ third/ fourth/…/(n-1)th month for that specific KPI and so on.

(c) It is further clarified that if the increase in deficiency level results in application of the higher penalty slab, then such higher deficiency shall be considered as first month in the next (higher) penalty slab.

(d) Sub Article 8.7 (a) shall not be applicable during the first 6 months post COD and for the KPIs associated with segregation, it shall come into effect after a period of 12 months post COD.

8.8 Payment Mechanism

i. The Monthly Collection and Transportation Charges (MCTC) shall be paid to the Concessionaire as follows:

MCTC = Fixed Payment (FP) + Performance based Payment (PP) – Transport Adjustment Factor (TAF)[15]

ii. Formula for Fixed Payment on a monthly basis:

FP =50% (Fifty percent) of IMQ or applicable MQ.

iii. Formula for Performance Based Payment (PP) on a monthly basis:

PP = 50% of IMQ/MQ- Monthly Penalty (MP), whichever applicable as per Schedule 26 section (B).

Where:

Formula for Monthly Penalty = R*Wco*PP

Where:

R = Penalty Rate as per Penalty Slabs Specified in Table 3 of Schedule 17

Wco (Weightage as per criticality of operation) = WKPI* W_{Comp}

WKPI = Sub-weightage of KPI

W_{Comp} = Weightage of Component

PP = Performance based Payment (Monthly)

iv. Formula for Transport Adjustment Factor (TAF) on a monthly basis:

[15] Shall be applicable only in case the Waste Disposal Point or Centralized Processing Unit is changed more than two kilometers.

TAF = {(BRTD-MRTD)/3} * Moving Average of the price of High-Speed Diesel (HSD) for Chennai for the current month as notified by Indian Oil Corporation Limited

(wherein 3 (Km/liter) is the Mileage of Refuse Compactor vehicles)

v. The payment shall be released by the Authority in two stages.

a. Stage I: The Concessionaire shall submit the monthly invoice for Fixed Payment (FP) (Invoice I) in the prescribed format to the IE, complete in all respects, by the 5th of the subsequent month. The IE shall verify and certify the correctness and genuineness of the FP invoice within 2 (two) days and forward the FP invoice for the Authority's approval and payment. The Authority shall release the payment within 30 (thirty) working days from the date of receipt of certified FP Invoice form the IE;

b. Stage II:

i) the Concessionaire shall raise the monthly invoice for PP (Invoice II) in the prescribed format (to be provided by the IE) along with the necessary particulars as agreed between the Parties. The invoice along with the particulars shall reach the IE by the 10th of the subsequent month to both the Authority and IE (one copy each);

ii) thereafter the IE shall evaluate the submitted invoices as per the KPIs described in Table 3 of Schedule 26 as well as estimate the Transport Adjustment Factor (TAF) for the concerned month;

iii) the IE's Evaluation Mechanism shall be based on MIS Reports generated from real time monitoring, visual inspections and a combination of both as specified in Schedule 26. In addition, the IE shall consider the periodic inspection/ evaluation reports of the Authority while evaluating the performance of the Concessionaire;

iv) post evaluation, the Penalty/ Incentive shall be calculated as per Schedule 26 Section (B)and the final amount of PP will be finalised as per Schedule 26;

v) The evaluation and calculation of the final amount of PP and TAF shall be completed by the IE within 10 (ten) Working days from the date of receipt of Invoice II.;

vi) Thereafter based on the recommendation of the IE, the Authority shall release the final amount of PP net of the applicable TAF to the Concessionaire within 30 (thirty) working days from the date of receipt of PP invoice from the IE;

c. deleted

vi. Delay in payment by the Authority

i) In case the Authority has failed to make MCTC or any payments due to the Concessionaire till 30 (thirty) working days from the date of receipt of the relevant invoice and recommendation from the IE, no interest shall be paid on the amount due.

ii) In case the Authority has failed to make MCTC or any payment-due to the Concessionaire for a period of 31 (thirty-one) to 180 (one hundred eighty) working days from the receipt of the relevant invoice and recommendation of the

IE, such sum shall until payment thereof carry interest rate of SBI MCLR plus 2 (two) percent from the due date of payment thereof until the same is paid to or otherwise realised by the Concessionaire entitled to the same.

iii) In case the Authority has failed to make MCTC or any payments due to the Concessionaire beyond a period of 180 (one hundred eighty) working days from the receipt of the relevant invoice and recommendation of the IE, it shall be construed as Authority's Event of Default as set forth in sub-Article 13.1 (b) of Vol II A.

vii. All payment to the Concessionaire by the Escrow Agent shall be made on the recommendation of the Authority within a period of 30 (thirty) days.

viii. The Transport Adjustment Factor (TAF) shall come into effect on a monthly basis after a period of one year from COD and shall be applicable only if (BRTD-MRTD) exceeds +/-10% of BRTD. When applicable, it shall be applied on the full difference between BRTD and MRTD.

8.9 Payment during Handing Over Phase

Parties agree that during the Handing Over Phase the payment shall be provisioned on the Area Based Pro Rata Rate (ABPRR) as given below:

Payment = (ABPRR * Actual area serviced * number of days of serviced in that particular month)/ total number of days in that particular month

It is further clarified that the ABPRR of different zones shall be payable as per the following table:

Zones	Area (sq km)	ABPRR/ Days in Month (A)	Area/Zone Taking Over Date	COD	No. of Days (B)	Payment = (A*B)
5	21.81					
6	17.11					

8.10 Resolution of Disputes related to Payment

Parties agrees that for any payment related dispute, Parties shall resort to amicable resolution of dispute as per sub-Article 17.1. In case the dispute is not resolved amicably, Parties shall follow resort to Arbitration as provided in sub Article 17.2.

8.11 Payment of Incentive to the Concessionaire

Incentive shall be paid to the Concessionaire as per the following conditions:

(a) Incentive trigger: The payment of incentive shall be applicable, only if the Concessionaire is not levied any penalty for three months on a consecutive basis for any of the core KPIs , as specified in Schedule 26 of Volume-II B.

(b) The incentive shall be paid as per the following formula:

Incentive Payment = 1% * {(a + b + c)}

Where a, b & c are the MQs for those three consecutive months for which the Concessionaire has not been levied any penalty for any of the core KPIs.

(c) The above computation shall be done by the IE and notified to the Concessionaire, and on receipt of this notification the Concessionaire shall raise the Incentive Invoice (Invoice IV) along with the particulars shall be submitted by the 10th of the subsequent month to both the Authority and IE (one copy each).

(d) Incentive payment shall not be applicable during the Handing Over Phase.

The Incentive shall be paid for those blocks of three consecutive months for which the Concessionaire is not levied any penalty for any of the core KPIs and the process of computation and payment shall be as per sub-Article 8.11 (b). However, it is further clarified that if the Concessionaire is not levied any penalty for four months or more on a consecutive basis for any of the core KPIs, then the Concessionaire shall be paid only for the first three consecutive months and the fourth month shall be considered as commencement of the next cycle of incentive if applicable.

9. Article 9: Not Used

10. Article10: Deleted

Deleted

11. Article 11: Change in Law

11.1 Change in Law

Change in Law means the occurrence or coming into force of any of the following, after the Bid submission Date:

a) the enactment of any new Indian Law;
b) the repeal, modification or re-enactment of any existing Indian Law;
c) a change in the interpretation or application of any Indian law by a court of record;
d) any change in the rates of any of the applicable Taxes;
e) Any change in the GoI / GoTN SWM Policy and/ or Authority's SWM Policy;
f) any change in Law directly or indirectly affecting the Concessionaire's project operation or payment or financial status; and
g) provided that Change in Law shall not include:
   (i) coming into effect, after the bid submission Due Date, of any provision of a statute which is already in place as of the bid submission Due Date or
   (ii) any new law or any change in the existing law under the active consideration of or in the contemplation of any government as of the Bid Submission Due Date, which is a matter of public knowledge

11.2 Process & Determination of Impact

(a) The Parties acknowledge and agree that the demand for cash compensation under the sub-Article 11.1 shall be restricted to the effect of Change in Law during the respective Concession Year and shall be made within 180 (one hundred eighty) days.

(b) The Authority warrants that the relief to the Concessionaire shall be given either:
   i. adjusting the prevailing Annual Quote either increase or decrease; or
   ii. one time compensation in case of increase; or
   iii. converting the compensation into maximum up-to 4 (four) quarterly payment; or
   iv. any combination of above three options.

(c) Determination of "Relief to the Concessionaire"

The Authority shall form a committee chaired by Chief Engineer (Solid Waste Management) of following personals:

(i) Superintending Engineer of Authority
(ii) Executive Engineer of the Authority
(iii) Financial Expert of IE
(iv) Contract expert of IE
(v) Any independent member as per the Authority's

The committee shall: (i) determine the scope of applicability of change in law, (ii) impact of such change in law, (iii) determine the cost – in favor of either of the parties and (iv) award as per the provisions as set out in 11.2 (b).

11.3 Obligations of the Parties

a) Upon occurrence of a Change in Law, the Parties may, if it is entitled to claim relief under the provisions of sub-Article 11.2, notify the Independent Engineer, of the following:

(i) the nature and the impact of Change in Law on the Project;

(ii) in sufficient detail, the estimate of the Additional/ Reduced Cost likely to be incurred/reduced on account of the Change in Law;

(iii) the measures, which the Parties has taken or proposes to take to mitigate the impact of Change in Law, including in particular, minimising the Additional Cost;

(iv) the relief sought by the Parties.

b) Upon receipt of the notice of Change in Law issued either by the party pursuant to the preceding sub-article(a), the Authority and Concessionaire shall along with the Independent Engineer hold discussions and take all such steps as may be necessary including determination/certification by the Committee.

12. Article 12: Force Majeure

12.1 Force Majeure Events

As used in this Agreement, a Force Majeure Event shall mean occurrence in the Project Area any of the Political Event, Non-Political Event as defined in sub-Articles 12.2 and 12. 3 respectively, if it affects the performance by the Party claiming the benefit of Force Majeure (the Affected Party) of its obligations under this Agreement and which act or event

(a) is beyond the control of the Party claiming to be affected thereby (the "Affected Party")

(b) prevents the Affected Party from performing or discharging its obligations under this Agreement;

(c) the Affected Party has been unable to overcome or prevent despite exercise of due care and diligence;

(d) has Material Adverse Effect on the Affected Party.

12.2 Political Events

For purposes of sub-Article 12.1 hereinabove, Political Event shall mean one or more of the following acts or events by or on account of GoI / GoTN, the Authority or any other Government Agency:

(i) Change in Law, only when provisions of sub-Article 11.1 cannot be applied;

(ii) expropriation or compulsory acquisition by any Government Agency of any Project Assets or rights of the Concessionaire or by Government Agency(ies); or

(iii) any judgement or order of a court of competent jurisdiction or statutory authority in India made against the Concessionaire in any proceedings for reasons other than

a) failure of the Concessionaire to comply with applicable law or applicable permit; or

b) on account of breach of any applicable law or applicable permit or of any contract; or

c) enforcement of this agreement; or

d) shareholder made dysfunctional having shares in the concessionaire; or

e) exercise of any of its rights under this agreement by the Authority.

(iv) any unlawful, unauthorized or without jurisdiction refusal to issue or to renew or the revocation of any applicable permits, in each case, for reasons other than Concessionaire's breach or failure in complying with the Project requirements, Applicable Laws, Applicable Permits any judgement or order of a Government Agency or of any contract by which the Concessionaire as the case may be is bound;

(v) early termination of this Agreement by the Authority for reasons of national emergency, national security or the public interest.

12.3 Non-Political Events

Any of the following events which prevents the Affected Party from performing any of its obligations for a continuous period of 3 (three) days from the date of its occurrence, shall constitute a Non-Political Event. For purposes of sub-Article 12.3 hereinabove, Non-Political Event shall mean one or more of the following acts or events which is beyond the reasonable control and not arising out of the fault of the Affected Party, like

a) acts of God or events beyond the reasonable control of the Affected Party which could not reasonably have been expected to occur, like: lightning, earthquake, volcanic eruption, fire (to the extent originating from a source external to the Project Site), landslide and building collapse;
b) pandemic, spread of unknown virous or diseases, lockdown, radioactive contamination or ionizing radiation;
c) fire caused by reason not attributable to the Concessionaire or any of the employees or agents of the Concessionaire;
d) war, hostilities (whether war be declared or not);
e) invasion, act of foreign enemy, rebellion, riots, weapon conflict or military actions, civil war;
f) strikes or boycotts (other than those involving the Concessionaire, Contractors or their respective employees/representatives or attributable to any act or omission of any of them) interrupting the Project operation and services to the Project for a period exceeding 7 (seven) days and not being a Political Event set forth in sub-Article 12.2;
g) any event or circumstances of nature analogous to any of the foregoing.

12.4 Obligations of the Parties

a) Obligation to Notify

(i) As soon as practicable and in any case within 01 (one) day of the date of occurrence of a Force Majeure Event or the date of knowledge thereof, the Affected Party shall notify the Authority setting out, inter alia, the following in reasonable detail:

a) the nature and extent of the Force Majeure Event;
b) the estimated duration of the Force Majeure Event;
c) the nature of and the extent to which, performance of any of its obligations under this Agreement is affected by the Force Majeure Event;
d) the measures which the Affected Party has taken or proposes to take to alleviate/mitigate the impact of the Force Majeure Event and to resume performance of such of its obligations affected thereby;
e) Any other relevant information concerning the Force Majeure Event, and /or the rights and obligations of the Parties under this Agreement.

(ii) As soon as practicable and in any case within 01 (one) day of notification by the Affected Party in accordance with the preceding sub-Article 12.1, the Parties shall meet and hold discussions in good faith and where necessary conduct physical inspection/survey of the Project Area and Project Facilities in order to:

a) assess the impact of the underlying Force Majeure Event;
b) to determine the likely duration of Force Majeure Event and;
c) to formulate damage mitigation measures and steps to be undertaken by the Parties for resumption of obligations, the performance of which shall have been affected by the underlying Force Majeure Event.

(iii) The Affected Party shall during the duration of Force Majeure event provide to the other Party with regular (not less than weekly or daily or as the case may be) reports

concerning the matters set out in the preceding sub-Article 12.1 as also any information, details or document, which the Parties may reasonably require.

b) Performance of Obligations

Performance of Obligations: If the Affected Party is rendered wholly or partially unable to perform any of its obligations under this Agreement because of a Force Majeure Event, it shall be excused from performance of such obligations to the extent it is unable to perform the same on account of such Force Majeure Event provided that:

(i) the excuse from performance shall be of no greater scope and of no longer duration than is necessitated by the Force Majeure Event as agreed between the Parties;

(ii) the Affected Party has taken all reasonable efforts to avoid, prevent, mitigate and limit damage, if any, caused or is likely to be caused to the Project Facility and Project Operation as a result of the Force Majeure Event and to restore the Project Facility and Project Operation, in accordance with the Good Industry Practice and its relative obligations under this Agreement;

(iii) when the Affected Party is able to resume performance of its obligations under this Agreement, it shall give to the other Party written notice to that effect and shall promptly resume performance of its obligations hereunder, the non-issue of such notice being no excuse for any delay for resuming such performance;

(iv) the Affected Party shall continue to perform such of its obligations which are not affected by the Force Majeure Event, and which are capable of being performed in accordance with this Agreement;

(v) the Affected party shall take all remedial measures including duly prosecuting and exhausting all such remedies available to the Affected Party under the Applicable Laws;

(vi) any insurance proceeds received shall, subject to the provisions of Financing Documents, be entirely applied to repair, replace or re-instate the assets damaged on account of the Force Majeure Event.

c) Disaster: Performance during Cyclone or Flood or inclement weather condition or high rainfall

The Concessionaire and the Authority before the onset of cyclone, shall establish a command & control centre or war room, make the strategy as per the following guideline:

i. assessment of the impending impact and subsistence of these impact i.e. time horizon;

ii. activities to be performed before the cyclone, at the time of cyclone and after the cyclone;

iii. resources to be deployed by Parties;

iv. duration of suspension of KPIs: two days before the onset and ten to fifteen days after the impact; However, if the Concessionaire's Project Facilities are severely impacted the Authority may extended the suspension of KPIs on the recommendation of IE;

v. The concessionaire shall act as per the Disaster Management Schedule-22 and shall not be any extra payment against services rendered;

d) Support to be rendered to the Concessionaire

As the case may be and as the situation may warrants, in case of occurrence of Force Majeure due to No-Political Event and Disaster, the Authority may provide

i. bus, medical services, space for Concessionaire people, special incentives to Concessionaire's employees, food packets, electricity connection, medical facility, emergency services etc.

ii. paying directly to the contractor who has supplied vehicles or equipment or tools etc

The authority shall not make any direct payment to the Concessionaire, nor any payment of the Concessionaire shall be deducted in leu of the expenditure made by the Authority. It is further clarified that there shall not be any direct cash compensation to the Concessionaire.

12.5 Termination due to Force Majeure Event

a) Termination

i) If a Force Majeure Event which is Non-Political Event continues or is in the reasonable judgement of the Parties is likely to continue beyond a period of 30 (thirty) days, the Parties may mutually decide to terminate this Agreement or continue this Agreement on mutually agreed revised terms. If the Parties are unable to reach an agreement in this regard, the Affected Party shall after the expiry of the said period of 30 (thirty) days, be entitled to terminate this Agreement by issuing Termination Notice.

ii) Notwithstanding anything inconsistent contained in this Agreement, if a Force Majeure Event is a Political Event and the same subsists for a period exceeding 60 (sixty) days either Party shall be entitled to terminate this Agreement, provided further that the Authority may at its sole discretion have the option to terminate this Agreement any time after the occurrence of the Political Event.

b) Termination Notice

If either Party having become entitled to do so decides to terminate this Agreement pursuant to the preceding sub-Article (a), it shall issue Termination Notice setting out:

(i) in sufficient detail the underlying Force Majeure Event;

(ii) the Termination Date which shall be a date occurring not earlier than 60 days from the date of Termination Notice;

(iii) the estimated Termination Payment including the details of computation thereof and;

(iv) any other relevant information.

c) Obligation of Parties

Following issue of Termination Notice by either Party, the Parties shall promptly take all such steps as may be necessary or required to ensure that:

(i) the Termination Payment, if any, payable by the Authority in accordance with the following sub-article (d) is paid to the Concessionaire on the Termination Date and

(ii) the Project Site/Project Facilities are handed back to the Authority by the Concessionaire

on the Termination Date free from all Encumbrance.

12.6 Termination Payment

Termination Payment for Force Majeure Events: Upon Termination of this Agreement pursuant to sub Article 12.5 (a) hereinabove, Termination Payment to the Concessionaire shall be made in accordance with the following:

(a) if the Termination is on account of Political or Non-Political Event, the Concessionaire shall be entitled to receive from the Authority by way of Termination Payment an amount equal to the Book Value of the Project Fixed Assets at the time of termination. Further the Performance Security shall be released within a period of 180 (one hundred and eighty) days post the date of Termination.

12.7 Liability for other losses, damages etc.

Save and except as expressly provided in this Article 12, neither Party hereto shall be liable in any manner whatsoever to the other Party in respect of any loss, damage, cost, expense, claims, demands and proceedings relating to or arising out of occurrence or existence of any Force Majeure Event.

13. Article 13: Events of Termination and Default

13.1 Events of Default and Termination

Event of Default means either Concessionaire Event of Default or The Authority Event of Default or both as the context may admit or require.

(a) Concessionaire Event of Default

Any of the following events shall constitute an event of default by the Concessionaire ("Concessionaire Event of Default") unless such event has occurred as a result of one or more reasons set out in Article 12.

(i) The Concessionaire has failed to achieve Financial Closure within stipulated 70 (seventy) days from Commencement Date for any reason whatsoever unless waived off.

(ii) The Concessionaire has failed to achieve the Conditions Precedent as per the sub-Article 2.4 (B).

(iii) The Concessionaire has failed to achieve COD within stipulated time period of 200 (two hundred) days from Commencement Date for any reason whatsoever.

(iv) At any time during the Concession Period, the Concessionaire fails to adhere to the Project Implementation Requirements and has failed to remedy the same within 30 (Thirty) days beyond the time of first notice.

(v) The Concessionaire is in Material Breach of any of its obligations under this Agreement and the same has not been remedied for more than 60 (sixty) days or time period prescribed for individual items.

(vi) The Concessionaire has created any encumbrance on the Project Site/ Project Facilities in favour of any Person save as otherwise expressly permitted under this Agreement.

(vii) The Concessionaire has failed to ensure minimum shareholding requirements specified in sub-Article 5.7.

(viii) A resolution has been passed by the shareholders of the Concessionaire for voluntary winding up/ dissolution of the Concessionaire.

(ix) Any petition for winding up of the Concessionaire has been admitted and liquidator or provisional liquidator has been appointed or the Concessionaire has been ordered to be wound up by Court of competent jurisdiction except for the purpose of amalgamation or reconstruction with the prior consent of the Authority, provided that, as part of such amalgamation or reconstruction, the property, assets and undertaking of the Concessionaire are transferred to the amalgamated or reconstructed entity and that the amalgamated or reconstructed entity has unconditionally assumed the obligations of the Concessionaire under this Agreement and the Project Agreements, and provided further that:

(A) the amalgamated or reconstructed entity has the technical capability and operating experience necessary for the performance of its obligations under this Agreement and the Project Agreements;

(B) the amalgamated or reconstructed entity has the financial standing to perform its obligations under this Agreement and the Project Agreements and has a credit worthiness at least as good as that of the Concessionaire as at Commencement Date;

(C) each of the Project Agreements remains in full force and effect.

(x) The Concessionaire has not adhered to the provisions of the Agreement, where Concessionaire's Event of Default is detailed.

(xi) The Concessionaire has abandoned the Project.

(xii) The Concessionaire has repudiated this Agreement or has otherwise expressed an intention not to be bound by this Agreement.

(xiii) The Concessionaire has suffered an attachment levied through any legal entity on any of the assets located or comprised in the Project Site/Project Facilities, causing a Material Adverse Effect on the Project and such attachment has continued for a period exceeding 30 (Thirty) days.

(xiv) The Concessionaire has delayed any payment due to the Authority under this Agreement for 90 (ninety)days or more.

(xv) Deleted.

(xvi) The Consortium formed for the purpose of the Project is changed by the Concessionaire without the consent of Authority.

(xvii) The Concessionaire lifts waste from place other than the place under its jurisdiction unless specified by Authority.

(xviii) In case of the Concessionaire being in the same deficiency level of 25 (twenty-five) percent or higher, for any of the Core KPIs, beyond a period of three months consecutively, the Authority may opt for Change of Scope as specified in Article 7 or Termination as set forth in Article 13.

(b) Authority Event of Default

Any of the following events shall constitute an event of default by Authority ("Authority Event of Default"), when not caused by a Concessionaire Event of Default or a Force Majeure Event:

(i) Authority has failed to provide the Project Sites to the Concessionaire as per the provisions of Schedule 4 /Schedule 19/ approved MIOP.

(ii) Authority has failed to make MCTC or any payments due to the Concessionaire and more than 180 (one hundred eighty) days have elapsed since such recommendations of payment to the Concessionaire by the IE.

(iii) Authority is in Material Breach of any of its obligations under this Agreement and has failed to cure such breach within 60 (sixty) days of receipt of notice thereof issued by the Concessionaire.

(iv) Authority has repudiated this Agreement or otherwise expressed its intention not to be bound by this Agreement without giving reasons

(v) Authority has unreasonably withheld or delayed of any approval or permission which the Concessionaire is obliged to seek under this Agreement, and thereby caused or likely to cause Material Adverse Effect.

(vi) Authority has directed the Concessionaire to carry out the works orally without any Change of Scope Order.

(vii) Authority has not addressed the hardship created to the Concessionaire.

(viii) Any governmental action not arising out of a breach, default or lapse on the part of the Concessionaire, whereby the Concession/ this Agreement becomes inoperable or takeover by any government agency of the Project/ Project Facilities or any part thereof, thereby causing Material Adverse Effect.

(ix) Any representation made, or warranties given by the Authority under this Agreement has been found to be false or misleading.

13.2 Termination due to Events of Default

(a) Termination for Concessionaire Event of Default

(i) Without prejudice to any other right or remedy which the Authority may have in respect thereof under this Agreement, upon the occurrence of a Concessionaire Event of Default, the Authority shall be entitled to terminate this Agreement in the manner as set out under this Article.

(ii) Not used.

(iii) If the Authority decides to terminate this Agreement pursuant to this Article, it shall in the first instance issue Preliminary Notice to the Concessionaire. Within 15 (fifteen) days of receipt of the Preliminary Notice, the Concessionaire shall submit to Authority in sufficient detail, the manner in which it proposes to cure the underlying Event of Default (the "Concessionaire's Proposal to Rectify"). In case of non-submission of the Concessionaire's Proposal to Rectify within the said period of 15 (fifteen) days, the Authority shall be entitled to terminate this Agreement by issuing Termination Notice as per sub-Article 13.2 (c), and to appropriate the Performance Security, if subsisting.

(iv) Consequent to the submission of the Proposal to Rectify by the Concessionaire to the Authority as per sub-Article 13.2 (a) (iii), the Concessionaire shall have a maximum period of 30 days ("Cure Period") to remedy/cure the underlying Event of Default as per the proposal submitted by the Concessionaire. However, if the Concessionaire fails to remedy/cure the underlying Event of Default within the time period stipulated above, the Authority shall be entitled to terminate this Agreement, by issuance of Termination Notice as per sub-Article 13.2 (c) and to appropriate Performance Security, if subsisting.

(b) Termination for the Authority's Event of Default

(i) Without prejudice to any other right or remedy which the Concessionaire may have in respect thereof under this Agreement, upon the occurrence of Authority Event of Default, the Concessionaire shall be entitled to terminate this Agreement in the manner as set out in this Article.

(ii) If the Concessionaire decides to terminate this Agreement pursuant to preceding sub-Article 13.2 (b) (i) it shall in the first instance issue Preliminary Notice to the Authority. Within 30 (thirty) days of receipt of Preliminary Notice, Authority shall forward to the Concessionaire its proposal to remedy/ cure the underlying Event of Default (the "Authority Proposal to

Rectify"). In case of non-submission of Authority Proposal to rectify within the period stipulated therefore, the Concessionaire shall be entitled to terminate this Agreement by issuing Termination Notice.

(iii) If Authority Proposal to Rectify is forwarded to the Concessionaire within the period stipulated therefore, Authority shall have further period of 30 (thirty) days to remedy/ cure the underlying Event of Default. If, however Authority fails to remedy/ cure the underlying Event of Default within such further period allowed, the Concessionaire shall be entitled to terminate this Agreement by issuing Termination Notice.

(c) Termination Notice

If a Party having become entitled to do so decides to terminate this Agreement pursuant to the preceding sub article (a) or (b), it shall issue Termination Notice setting out:

(i) in sufficient detail the underlying Event of Default;

(ii) the Termination Date which shall be a date occurring not earlier than 60 days from the date of Termination Notice;

(iii) the estimated Termination Payment including the details of computation thereof and;

(iv) any other relevant information.

(d) Obligation of Parties

Following issue of Termination Notice by either Party, the Parties shall promptly take all such steps as may be necessary or required to ensure that:

(i) until Termination the Parties shall, to the fullest extent possible, discharge their respective obligations so as to maintain the continued operation of the Project Facility(ies),

(ii) the termination payment, if any, payable by the Authority in accordance with the sub-Article 13.3 shall be paid to the Concessionaire within 90 (ninety) from the Termination Date and

(iii) All the Project Facilities are handed back to the Authority by the Concessionaire on the Termination Date free from any Encumbrance along with any payment that may be due by the Concessionaire to the Authority.

(e) Withdrawal of Termination Notice

Notwithstanding anything inconsistent contained in this Agreement, if the Party who has been served with the Termination Notice cures the underlying Event of Default to the satisfaction of the other Party at any time before the Termination occurs, the Termination Notice shall be withdrawn by the Party which had issued the same. Provided that the Party in breach shall compensate the other Party for any direct costs/ consequences occasioned by the Event of Default which caused the issue of Termination Notice.

13.3 Termination Payments

(A) Upon Termination of this Agreement on account of Authority Event of Default, the Concessionaire shall be entitled to withdraw the Performance Security and the termination payment shall be made as per following:

i) The Termination Payment from the Authority shall be equal to the value of the

Project Fixed Assets and Project Movable Assets as determined by the IE where the IE shall apply prudent accounting principle and value the asset by taking average of the asset value arrived by three different asset valuers.

ii) It is further stated that either of the Parties can opt for Arbitration as set forth in sub-Article 17.1 of this Agreement if they do not agree to the quantum of Termination Payment arrived by the IE.

(B) Upon termination of this Agreement on account of Concessionaire's Event of default, the following shall apply:

a. Forfeiture of performance Security

b. The Termination Payment from the Authority shall be equal to 90% (ninety percent) of the value of the Project Fixed Assets and Project Movable Assets as determined by the IE where the IE shall apply prudent accounting principle and value the asset by taking average of the asset value arrived by three different registered asset valuers and shall hand back all the assets to the Authority.

c. The bidding entity shall be barred from participating in any tender for a period of not less than 10 (ten) years.

13.4 Rights of the Authority on Termination

Upon Termination of this Agreement for any reason whatsoever, the Authority shall:

(i) enter upon and take possession and control of Project Fixed and moveable Assets and Project Area forthwith;

(ii) prohibit the Concessionaire and any Person claiming through or under the Concessionaire from entering upon/dealing with the Project Fixed and movable Assets and Project Area;

(iii) Notwithstanding anything contained in this Agreement, the Authority shall not, as a consequence of Termination or otherwise, have any obligation whatsoever including but not limited to obligations as to compensation for loss of employment, continuance or regularization of employment, absorption or re-employment on any ground, in relation to any person in the employment of or engaged by the Concessionaire in connection with the Project, and the hand back of the Project Facilities and Project Assets by the Concessionaire to Authority shall be free from any such obligation.

14. Article 14: Mode of Payment by the Authority

14.1 Mode of Payment

The Concessionaire hereby expressly authorizes the Authority to pay MCTC, Termination Payment, and any other payment which becomes payable by the Authority to the Concessionaire under this Agreement directly to the credit of the account designated by the Concessionaire.

14.2 Valid Discharge

The Concessionaire hereby agrees, undertakes and confirms that;

a) the payment to the credit of the Designated Bank Account or to the Designated Bank shall be made by the Authority notwithstanding any instructions to the contrary issued or disputes raised by the Concessionaire.

b) any payment made in accordance with the preceding sub-article (a) shall be valid and the Authority shall to the extent of the payment so made be relieved and discharged of all its obligations in respect of such payments under this Agreement. Provided no such discharge shall prejudice any claim which the Concessionaire may have against the Lenders.

c) In the absence of the Designated Bank Account or upon the Concessionaire procuring and furnishing to the Authority a certificate from the Lenders to the effect that the Concessionaire has discharged its obligations under the Financing Documents, all payments accruing to the Concessionaire under this Agreement shall be made by the Authority to the Concessionaire directly.

15. Article 15: Hand back of Project Facilities

15.1 Hand back and Defect Liability Period

a) The Concessionaire shall on the date of expiry of the Concession Period or on Termination, hand back Authority's Assets, and all other Project Fixed Assets along with static compactor locations to the Authority free of all costs and encumbrances and in good operable condition.

b) In case of expiration of the Concession Agreement: The process of handing back shall be initiated at least 3 (three) months before the actual date of expiry of the Concession Period by a joint inspection by the Authority, the Independent Engineer and the Concessionaire. The Independent Engineer shall, within 15 days of such inspection prepare and furnish to the Concessionaire a list of works/jobs, if any, to be carried out to conform to the hand back requirements which shall be generally an as-and-where-basis. The Concessionaire shall promptly undertake and complete such works at least two months prior to the date of expiry of the Concession Period and also ensure that the Project Assets continue to meet the operational requirement until six months after handing taking over of the project by the Authority.

c) The Authority and the Independent Engineer shall, within 15 (fifteen) days of the joint inspection undertaken under preceding sub-Article (b) prepare and furnish to the Concessionaire a list of items, if any, with corresponding distinctive descriptions, which are to be compulsorily handed back to the Authority along with the Project Facilities excluding the Concessionaire's item which are under licence or for which the Concessionaire holds the patents. It is further clarified that the cost of handing over of the movable asset i.e. RTO charges, insurance charges, utility name change charges etc. shall be borne by the Authority, including there shall not be any utility outstanding.

d) The concessionaire shall not handover any movable asset which has legal encumbrance, and the concessionaire warrants that if there is any legal encumbrance on Project Assets, then the concessionaire shall have to incur the legal cost till such period, even after the expiration or termination of the Agreement.

e) The Concessionaire hereby acknowledges the Authority's rights specified in the Concession agreement enforceable against it upon Termination and its corresponding obligations arising there from. The Concessionaire undertakes to comply with and discharge of promptly all such obligations.

f) At least 1 (one) month prior to the expiry of the Concession Period, the Concessionaire shall, for due performance of its obligations relating to hand back of the Project Assets, submit to Authority a bank guarantee, from a Nationalized bank acceptable to Authority for an amount equal to 10 (ten) percent of the Performance Security submitted at the time of commencement of the Concession Agreement. The validity period of the bank guarantee shall be 180 (one hundred and eighty) days post expiry of the Concession Period.

g) In case the Concessionaire fails to carry out the above works/jobs, within the stipulated period, the Authority shall be at its liberty to have the same executed by any other Person at the risk and cost of the Concessionaire and any cost incurred by the Authority in this regard shall be

reimbursed by the Concessionaire. For this purpose, the Authority may withhold a sum equal to 10 (ten) percent of the Rebased Initial Annual Quote on the Expiration Year; this amount shall be recovered by way of partial encashing of the Performance Security.

15.2 Retention Amount

a) In case the Concessionaire fails to carry out the above works/jobs, within the stipulated period. the Authority shall be at liberty to have the same executed by any other Person at the risk and cost of the Concessionaire and any cost incurred by the Authority in this regard shall be reimbursed by the Concessionaire. For this purpose, the Authority may withhold a sum maximum up to 10 (ten) percent of the Rebased Annual Quote on the Expiration Year; or this amount shall be recovered by way of partial encashing of the Performance Security.

b) The Retention Amount and the performance security (bank guarantee) shall be released/returned by the Authority upon the Independent Engineer certifying compliance by the Concessionaire with the requirement of the preceding sub-Article 15.1 or appropriated to the extent required towards the costs reimbursable by the Concessionaire in terms of preceding sub-Article(a)

16. Article 16: Independent Auditor

16.1 Appointment

a) Upon occurrence of any event necessitating or warranting appointment of the Independent Auditor under the provisions of this Agreement, and upon a proposal being made by either Party to the other, the Parties shall promptly (and in any case within 15 days of such proposal) confer and agree upon a reputed firm of Chartered Accountants practising in Chennai to be appointed as the Independent Auditor. Thereupon the Authority shall appoint the Independent Auditor on terms and conditions agreed to by the Parties and the Person to be appointed as the Independent Auditor.

b) If, upon a proposal being made by a Party for appointment of Independent Auditor, the other Party fails to confer and agree upon the Independent Auditor within the said period of 15 days, the Party proposing the appointment shall be entitled to appoint the Independent Auditor. Such appointment and the terms thereof shall be binding on the other Party.

16.2 Payment of Fees

All fees and costs of the Independent Auditor shall be shared equally and borne by the Parties. The mode of payment to the Independent Auditor shall be same as that of the Independent Engineer as specified in sub Articles 4.2 (b), 4.2 (c) and 4.2 (d).

17. Article 17: Dispute Resolution

17.1 Amicable Resolution

a) Save where expressly stated to the contrary in this Agreement, any dispute, difference or controversy of whatever nature between the Parties, howsoever arising under, out of or in relation to this Agreement including disputes, if any, with regard to any acts, decision or opinion of the Independent Engineer or the Independent Auditor and so notified in writing by either Party to the other (the "Dispute") shall in the first instance be attempted to be resolved amicably in accordance with the procedure set forth in sub-Article (b) below.

b) Either Party may require such Dispute to be referred to the Commissioner, Authority and the Chief Executive Officer of the Concessionaire for the time being, for amicable settlement. Upon such reference, the two shall meet at the earliest mutual convenience and in any event within 15 days of such reference to discuss and attempt to amicably resolve the Dispute. If the Dispute is not amicably settled within 15 (fifteen) days of such meeting between the two, either Party may refer the Dispute to arbitration in accordance with the provisions of sub-Article 17.2 below.

17.2 Arbitration

a) Procedure: Subject to the provisions of sub-Article 17.1, any Dispute which is not resolved amicably shall be finally settled by binding arbitration under the Arbitration Act. The arbitration shall be by a panel of three arbitrators, one to be appointed by each Party and the third to be appointed by the two arbitrators appointed by the Parties. The Party requiring arbitration shall appoint an arbitrator in writing, inform the other Party about such appointment and call upon the other Party to appoint its arbitrator. If within 15 days of receipt of such intimation the other Party fails to appoint its arbitrator, the Party seeking appointment of arbitrator may take further steps in accordance with Arbitration and Conciliation Act, 1996 and its amendments thereof.

b) Place of Arbitration: The place of arbitration shall be Chennai, Tamil Nadu.

c) English Language: The request for arbitration, the answer to the request, the terms of reference, any written submissions, any orders and awards shall be in English and, if oral hearings take place, English shall be the language to be used in the hearings.

d) Enforcement of Award: The Parties agree that the decision or award resulting from arbitration shall be final and binding upon the Parties and shall be enforceable in accordance with the Provision of the Arbitration and Conciliation Act, 1996 and its amendments thereof.

e) Performance during Arbitration: Pending the submission of and/or decision on a Dispute and until the arbitral award is published, the Parties shall continue to perform their respective obligations under this Agreement without prejudice to a final adjustment in accordance with such award

f) Payment to the Arbitrator: Parties shall bear the respective cost of Arbitration, however the payment to the third independent arbitrator shall be borne equally by the Parties.

18. Article 18: Representations and Warranties, Disclaimer

18.1 Representations and Warranties of the Concessionaire

The Concessionaire represents and warrants to the Authority that:

a) it is duly organised, validly existing and in good standing under the laws of India;

b) it is a Special Purpose Vehicle set up solely for the purpose of implementing and operating the Project/Project Facilities in accordance with the terms of this Agreement and that it will not during the subsistence of this Agreement undertake any other Project or business activity unrelated to the Project;

c) it has full power and authority to execute, deliver and perform its obligations under this Agreement and to carry out the transactions contemplated hereby;

d) it has taken all necessary corporate and other action under Applicable Laws and its constitutional documents to authorise the execution, delivery and performance of this Agreement;

e) it has the financial standing and capacity to undertake the Project;

f) this Agreement constitutes its legal, valid and binding obligation enforceable against it in accordance with the terms hereof;

g) it is subject to civil and commercial laws of India with respect to this Agreement and it hereby expressly and irrevocably waives any immunity in any jurisdiction in respect thereof;

h) the execution, delivery and performance of this Agreement will not conflict with, result in the breach of, constitute a default under or accelerate performance required by any of the terms of the Concessionaire's Memorandum and Articles of Association or of any member of the Consortium or any Applicable Laws or any covenant, agreement, understanding, decree or order to which it is a party or by which it or any of its properties or assets are bound or affected;

i) there are no actions, suits, proceedings or investigations pending or to the Concessionaire's knowledge threatened against it at law or in equity before any court or before any other judicial, quasi-judicial or other authority, the outcome of which may constitute Concessionaire Event of Default or which individually or in the aggregate may result in Material Adverse Effect;

j) it has no knowledge of any violation or default with respect to any order, writ, injunction or any decree of any court or any legally binding order of any Government Agency which may result in Material Adverse Effect;

k) it has complied with all Applicable Laws and has not been subject to any fines, penalties, injunctive relief or any other civil or criminal liabilities which in the aggregate have or may have Material Adverse Effect;

l) subject to receipt by the Concessionaire from the Authority of the Termination Payment and any other amount due under any of the provisions of this Agreement, in the manner and to the extent provided for under the applicable provisions of this Agreement all rights and interests of the Concessionaire in and to the Project / Project Facilities shall pass to and vest in the Authority on the Termination Date free and clear of all Encumbrances without any further act or deed on the part of the Concessionaire or the Authority;

m) no representation or warranty by the Concessionaire contained herein or in any other document

furnished by it to the Authority or to any Government Agency in relation to Applicable Permits contains or will contain any untrue statement of material fact or omits or will omit to state a material fact necessary to make such representation or warranty not misleading; and

n) no bribe or illegal gratification has been paid or will be paid in cash or kind by or on behalf of the Concessionaire to any Person to procure the Concession.

o) Without prejudice to any express provision contained in this Agreement, the Concessionaire acknowledges that prior to the execution of this Agreement, the Concessionaire has after a complete and careful examination made an independent evaluation of the Project Site, Project Requirements and the information provided by the Authority, and has determined to its satisfaction the nature and extent of risks and hazards as are likely to arise or may be faced by the Concessionaire in the course of performance of its obligations hereunder.

p) The Concessionaire also acknowledges and hereby accepts the risk of inadequacy, mistake or error in or relating to any of the matters set forth above and hereby confirms that the Authority shall not be liable for the same in any manner whatsoever to the Concessionaire

q) all information provided by the {Selected Bidder/ Consortium Members} in response to the Request for Proposals or otherwise, is to the best of its knowledge and belief, true and accurate in all material respects; and

r) All undertakings and obligations of the Concessionaire arising from the Concession Agreement.

18.2 Representations and Warranties of the Authority

The Authority represents and warrants to the Concessionaire that

a) the Authority has full power and authority to enter into the Concession Agreement.

b) the Authority has taken all necessary action to authorise the execution, delivery and performance of this Agreement.

c) This Agreement constitutes the Authority's legal, valid and binding obligation enforceable against it in accordance with the terms hereof.

d) Nothing in this Agreement conflicts with its constitutional authority, mandate, or any law or any other agreement, understanding or arrangement or any judgment, decree or order or any statute, rule or regulation applicable to it.

18.3 Obligation to notify change

In the event that any of the representations or warranties made/given by a Party ceases to be true or stands changed, the Party who had made such representation or given such warranty shall promptly notify the other of the same

19. Article 19: Miscellaneous

19.1 Assignment and Charges

a) Subject to sub-Articles (b) and (c) hereinbelow, neither Party shall assign this Agreement, or the rights, benefits and obligations hereunder save and except with prior consent of the other Party.

b) Except as provided in sub-Article (c) hereinbelow, the Concessionaire shall not create nor permit to subsist any encumbrance over or otherwise transfer or dispose of all or any of its rights and benefits under this Agreement except with prior consent in writing of the Authority, which consent the Authority shall not unreasonably withhold without assigning any reason whatsoever.

c) Restraint set forth in sub-Articles (a) and (b) above shall not apply to:

(i) liens/encumbrances arising by operation of law (or by an agreement evidencing the same) in the ordinary course of business of the Concessionaire;

(ii) Mortgages/pledges/hypothecation of (a) goods/assets other than the Project Fixed Assets as well as Authority's Assets and their related documents of title, and (b) receivables received by Concessionaire (excluding Insurance Proceeds) arising or created in the ordinary course of business and as security only for indebtedness to the Lender under the Financing Agreements and/or for working capital arrangements availed in relation to this Agreement;

(iii) Provided further that irrespective of security hereinabove permitted, Concessionaire is irrevocably obligated to procure release of such security and hand over to the Authority, upon Termination of this Agreement, their respective Project Assets free of all Encumbrances whatsoever.

d) Assignment by Authority: Notwithstanding anything to the contrary contained in this Agreement, the Authority may, after giving 60 (sixty) days' notice to the Concessionaire, assign and/ or transfer any of its rights and benefits and/or obligations under this Agreement to an assignee[16] who is, in the reasonable opinion of the Authority, capable of fulfilling all of the Authority's then outstanding obligations under this Agreement.

19.2 Interest and Right of Set Off

a) Any sum which becomes payable under any of the provisions of this Agreement by one Party to the other Party shall, if the same be not paid within the time allowed for payment thereof, shall be deemed to be a debt owed by the Party responsible for payment thereof to the Party entitled to receive the same. Without prejudice to any other right or remedy that may be available under this Agreement or otherwise under law, the Party entitled to receive such amount shall also have the right of set off.

b) Provided the stipulation regarding interest for delayed payments contained in this sub-Article 19.2 shall neither be deemed or construed to authorize any delay in payment of any amount due by a Party nor be deemed or construed to be a waiver of the underlying breach of payment obligations.

[16] Where the assignee is a 100% (hundred percent) held by the Authority or the State Government and the nature may be either a Public Sector Unit or Special Purpose Vehicle as per the policy.

19.3 Liability and Indemnity

a) General Indemnity

(i) The Concessionaire shall indemnify, defend and hold the Authority harmless against any and all proceedings, actions and third party claims arising out of a breach by the Concessionaire of any of its obligations under this Agreement except to the extent that any such claim has arisen due to breach by the Authority of any of its obligations under this Agreement or a Force Majeure Event which is a Political Event.

(ii) The Authority will, indemnify, defend and hold harmless the Concessionaire against any and all proceedings, actions, third party claims for loss, damage and expense of whatever kind and nature arising out of breach by the Authority, its officers, servants and agents of any obligations of the Authority under this Agreement except to the extent that any such claim has arisen due to breach by the Concessionaire of any of its obligations under this Agreement.

b) Without limiting the generality of this sub-Article 19.3 the Concessionaire shall fully indemnify, save harmless and defend the Authority including its officers, and subsidiaries from and against any and all loss and damages arising out of or with respect to failure of the Concessionaire (a) to comply with Applicable Laws and Applicable Permits, (b) to make payments of Taxes relating to the Concessionaire's Contractors, suppliers and representatives income or other taxes required to be paid by the Concessionaire without reimbursement hereunder, or (c) to pay amounts due as a result of materials or services furnished to the Concessionaire or any of its Contractors which are payable by the Concessionaire or any of its Contractors.

c) Without limiting the generality of the provisions of this sub Article 19.3, the Concessionaire shall fully indemnify, save harmless and defend the Authority from and against any and all damages which the Authority may hereafter suffer, or pay by reason of any demands, claims, suits or proceedings arising out of claims of infringement of any domestic or foreign patent rights, copyrights or other intellectual property, proprietary or confidentiality rights with respect to any materials, information, design or process used by the Concessionaire or by the Concessionaire's Contractors in performing the Concessionaire’s obligations or in any way incorporated in or related to the Project. If in any such suit, claim or proceedings, a temporary restraint order or preliminary injunction is granted, the Concessionaire shall make every reasonable effort, by giving a satisfactory bond or otherwise, to secure the suspension of the injunction or restraint order. If, in any such suit claim or proceedings, the Project or any part thereof comprised therein is held to constitute an infringement and its use is permanently injuncted, the Concessionaire shall promptly make every reasonable effort to secure for the Authority a license, at no cost to the Authority, authorising continued use of the infringing work. If the Concessionaire is unable to secure such license within a reasonable time, the Concessionaire shall, at its own expense and without impairing the POR, either replace the affected work, or part, or process thereof with non-infringing work or parts or process or modify the same so that it becomes non-infringing.

d) In the event that either Party receives a claim from a third party in respect of which it is entitled to the benefit of an indemnity under this sub-Article 19.3 (the 'Indemnified Party') it shall notify the other Party ("Indemnifying Party") within 14 (fourteen) days of receipt of the claim and shall not settle or pay the claim without the prior approval of the Indemnifying Party. Provided that, such approval not to be unreasonably withheld or delayed. In the event that the Indemnifying Party wishes to contest or dispute the claim it may conduct the proceedings in the name of the Indemnified Party subject to the Indemnified Party being secured against any costs involved to its reasonable satisfaction.

e) Defence of Claims

(i) The Indemnified Party shall have the right, but not the obligation, to contest, defend and litigate any claim, action, suit or proceeding by any third party alleged or asserted against such party in respect of, resulting from, related to or arising out of any matter for which it is entitled to be indemnified hereunder and their reasonable costs and expenses shall be indemnified by the Indemnifying Party. If the Indemnifying Party acknowledges in writing its obligation to indemnify the person indemnified in respect of loss to the full extent provided by this sub-Article 19.3, the Indemnifying Party shall be entitled, at its option, to assume and control the defence of such claim, action. suit or other proceedings, liabilities, payments and obligations at its expense and through counsel of its choice provided it gives prompt notice of its intention to do so to the Indemnified Party and reimburses the Indemnified Party for the reasonable cost and expenses incurred by the Indemnified Party prior to the assumption by the Indemnifying Party of such defence. The Indemnifying Party shall not be entitled to settle or compromise any claim, action, suit or proceeding without the prior written consent of the Indemnified Party unless the Indemnifying Party provides such security to the Indemnified Party as shall be reasonably required by the Indemnified Party to secure, the loss to be indemnified hereunder to the extent so compromised or settled.

(ii) If the Indemnifying Party has exercised its rights under sub Article 19.3 (d) above, the Indemnified Party shall not be entitled to settle or compromise any claim, action, suit or proceeding without the prior written consent of the indemnifying Party (which consent shall not be unreasonably withheld or delayed).

(iii) If the Indemnifying Party exercises its rights under sub Article 19.3 (d) above, then the Indemnified Party shall nevertheless have the right to employ its own counsel and such counsel may participate in such action, but the fees and expenses of such counsel shall be at the expense of such Indemnified Party, when and as incurred, unless:

1. the employment of counsel by such party has been authorised in writing by the Indemnifying Party; or
2. the Indemnified Party shall have reasonably concluded that there may be a conflict of interest between the Indemnifying Party and the Indemnified Party in the conduct of the defence of such action; or
3. the indemnifying Party shall not in fact have employed independent counsel

reasonably satisfactory to the Indemnified Party to assume the defence of such action and shall have been so notified by the Indemnified Party; or

4. the Indemnified Party shall have reasonably concluded and specifically notified the Indemnifying Party either:
   a) that there may be specific defences available to it which are different from or additional to those available to the Indemnifying Party; or
   b) that such claim, action, suit or proceeding involves or could have a material adverse effect upon it beyond the scope of this Agreement,

Provided that if sub Articles (2), (3) or (4) of sub-Article 19.3(e)(iii) above shall be applicable, counsel for the Indemnified Party shall have the right to direct the defence of such claim, action, suit or proceeding on behalf of the Indemnified Party and the reasonable fees and disbursements of such counsel shall constitute legal or other expenses hereunder

19.4 Governing Law and Jurisdiction

This Agreement shall be governed by the laws of India. The Courts at Chennai, India shall have jurisdiction over all matters arising out of or relating to this Agreement.

19.5 Waiver

a) Waiver by either Party of any default by the other Party in the observance and performance of any provision of or obligations under this Agreement:
   (i) shall not operate or be construed as a waiver of any other or subsequent default hereof or of other provisions or obligations under this Agreement.
   (ii) shall not be effective unless it is in writing and executed by a duly authorised representative of such Party; and
   (iii) shall not affect the validity or enforceability of this Agreement in any manner.

b) Neither the failure by either Party to insist on any occasion upon the performance of the terms, conditions and provisions of this Agreement or any obligation thereunder nor time or other indulgence granted by a Party to the other Party shall be treated or deemed as waiver of such breach or acceptance of any variation or the relinquishment of any such right hereunder.

19.6 Survival

Termination of this Agreement (a) shall not relieve the Concessionaire or the Authority of any obligations already incurred hereunder which expressly or by implication survives Termination hereof, and (b) except as otherwise provided in any provision of this Agreement expressly limiting the liability of either Party, shall not relieve either Party of any obligations or liabilities for loss or damage to the other Party arising out of or caused by acts or omissions of such Party prior to the effectiveness of such Termination or arising out of such Termination.

19.7 Not used

19.8 Not Used

19.9 Amendments

This Agreement and the Schedules together constitute a complete and exclusive understanding of the terms of the Agreement between the Parties on the subject hereof and no amendment or modification hereto shall be valid and effective unless agreed to by all the Parties hereto and evidenced in writing.

The amendment of the agreement shall be initiated on the recommendation of the IE and on receipt of the recommendation of the IE, the Authority shall constitute a committee as detailed in Change of Scope. The Change of Scope Committee shall recommend for the amendment of the Agreement as per the provisions of the Concession Agreement.

19.10 Liability for review of Documents

Except to the extent expressly provided in this Agreement

a) no review, comment or approval by the Authority or the Independent Engineer of any Project Agreement, MIOP submitted by the Concessionaire nor any observation or inspection of the construction, operation or maintenance of the Project nor the failure to review, approve, comment, observe or inspect hereunder shall relieve or absolve the Concessionaire from its obligations, duties and liabilities under this Agreement, Applicable Laws and Applicable Permits;

b) The Authority shall not be liable to the Concessionaire by reason of any review, comment, approval, observation or inspection referred to in sub-Article (a) above; and

c) However, if the Authority has failed to approve the MIOP within the time specified in the Agreement and the Concessionaire has already provided all the relevant information, that in such case the Authority or the Independent Engineer shall not pass the retrospective order for any change in the MIOP. The concessionaire shall present the proof of submission.

19.11 Third parties

This Agreement is intended solely for the benefit of the Parties and their respective successors and permitted assigns, and nothing in this Agreement shall be construed to create any duty to, standard of care with reference to, or any liability to, any person not a Party to this Agreement including any Concessionaire's Contractor.

19.12 Ownership

Without prejudice and subject to the Concession, the ownership of the Secondary Collection Points, Workshops, Parking Sites and the Project Fixed Assets, including all improvements made therein by the Concessionaire, shall at all times remain that of the Authority

19.13 Successors and assigns

This Agreement shall be binding upon and inure to the benefit of the Parties and their respective successors and permitted assignees.

19.14 Limitation of Liability

Not Used

19.15 Divestment Requirements

(A) Upon Termination, the Concessionaire shall comply with and conform to the following Divestment Requirements:

(1) notify to the Authority forthwith the location and particulars of all Project Fixed Assets.

(2) Deleted

(3) deliver and transfer relevant records, reports, and other consent & clearances pertaining to the Project and its operation and maintenance, including all programmers and manuals pertaining thereto.

(4) transfer and/or deliver all Applicable Permits to the extent permissible under Applicable Laws;

(5) comply with all other requirements as may be prescribed or required under Applicable Laws for completing the divestment and assignment of all rights, title and interest of the Concessionaire in the Project Facilities, free from all Encumbrances, absolutely unto the Authority or to its nominee.

(B) Subject to the exercise by the Authority of its rights under this Agreement to perform or procure the performance by a third party of any of the obligations of the Concessionaire, the Parties shall continue to perform their obligations under this Agreement, notwithstanding the issuance of any Termination Notice, until the Termination of this Agreement becomes effective in accordance with its terms.

19.16 Divestment costs

(i) The Concessionaire shall bear and pay all costs incidental to divestment of all of the rights, title and interest of the Concessionaire in the Project Fixed Asset in favour of the Authority upon Termination, save and except that all stamp duties payable on any deeds or documents executed by the Concessionaire in connection with such divestment shall be borne by the Authority.

(ii) In the event of any dispute relating to matters covered by and under this Article 17, the Dispute Resolution Procedure shall apply.

19.17 Vesting Certificate

The divestment of all rights, title and interest in the Project Assets shall be deemed to be complete on the date when all of the divestment requirements have been fulfilled, and the Authority shall, without unreasonable delay, thereupon issue a certificate (the "Vesting Certificate"), which will have the effect of constituting evidence of divestment by the Concessionaire of all of its rights, title and interest in the Project Facilities, and their vesting in the Authority pursuant hereto. It is expressly agreed that any defect or deficiency in the Divestment Requirements shall not in any manner be construed or interpreted as restricting the exercise of any rights by the Authority or its nominee on, or in respect of, the Project Facilities on the footing that all Divestment Requirements have been complied with by the Concessionaire.

19.18 Entire Agreement

This Agreement and the Schedules together constitute a complete and exclusive statement of the terms of the agreement between the Parties on the subject hereof, and no amendment or modification hereto shall be valid and effective unless such modification or amendment is agreed to in writing by the Parties and duly executed by persons especially empowered in this behalf by the respective Parties. All prior written or oral understandings offers or other communications of every kind pertaining to this Agreement are abrogated and withdrawn. For the avoidance of doubt, the Parties hereto agree that any obligations of the Concessionaire arising from the Request for Qualification or Request for Proposals, as the case may be, shall be deemed to form part of this Agreement and treated as such

19.19 Notices

Unless otherwise stated, notices to be given under this Agreement including but not limited to a notice of waiver of any term, breach of any term of this Agreement and termination of this Agreement, shall be in writing and shall be given either by hand delivery or through e-mail deliver or transmitted to the Parties at their respective addresses set forth below:

If to the Authority:

The Commissioner

Greater Chennai Corporation,

Ripon Building,Chennai-600003,

Tamil Nadu

e-mail:

If to the Concessionaire:

……..

……..,

……..,

……..

e-mail:

Or such address or e-mail as may be duly notified by the respective Parties from time to time, and shall be deemed to have been made or delivered of any communication made by letter, when delivered by hand, or by mail at that address.

19.20 Severability

If for any reason whatsoever any provision of this Agreement is or becomes invalid, illegal or unenforceable or is declared by any court of competent jurisdiction or any other instrumentality to be invalid, illegal or unenforceable, the validity, legality or enforceability of the remaining provisions shall not be affected in any manner, and the Parties shall negotiate in good faith with a

view to agreeing upon one or more provisions which may be substituted for such invalid, unenforceable or illegal provisions, as nearly as is practicable. Provided failure to agree upon any such provisions shall not be subject to dispute resolution under this Agreement or otherwise.

19.21 No Partnership

This Agreement shall not be interpreted or construed to create an association, joint venture or partnership between the Parties, or to impose any partnership obligation or liability upon either Party, and neither Party shall have any right, power or authority to enter into any agreement or undertaking for, or act on behalf of, or to act as or be an agent or representative of, or to otherwise bind, the other Party.

19.22 Language

All notices required to be given under this Agreement and all communications, documentation and proceedings which are in any way relevant to this Agreement shall be in writing and in English language.

19.23 Exclusion of Implied Warranties etc.

This Agreement expressly excludes any warranty, condition or other undertaking implied at law or by custom or otherwise arising out of any other agreement between the Parties or any representation by any Party not contained in a binding legal agreement executed by the Parties.

19.24 Counterparts

This Agreement may be executed in three counterparts[17], each of which when executed and delivered shall constitute an original of this Agreement but shall together constitute one and only the Agreement.

IN WITNESS WHEREOF THE, PARTIES HAVE EXECUTED AND DELIVERED THIS AGREEMENT AS OF THE DATE FIRST ABOVE WRITTEN.

SIGNED SEALED AND DELIVERED

For and on behalf of the Authority by (Signature)

[17] (i) one copy for Department (ii) one copy for Commissioner (iii) one copy for the Concessionaire and in addition the concessionaire shall make three true copies to be delivered to the Authority

(Name) (Designation)

SIGNED, SEALED AND DELIVERED

For and on behalf of CONCESSIONAIRE by: In the presence of.

1)

2)

GREATER CHENNAI CORPORATION

Greater Chennai Corporation (GCC) invites "Request for Qualification cum Request for Proposal" (RFQ-cum-RFP) through e-procurement from reputed entities under single stage Three Bid system through International Competitive Bidding for:

'Collection & Transportation of Solid Waste, Street Sweeping Waste (including street sweeping activities), Horticulture Waste and Collection & Storage of Domestic Hazardous Waste in the Zones 5&6 (Package-6) to the Designated Processing Facility/ Dump Site/ Depositing Centers of Greater Chennai Corporation

TENDER NOTICE NO.: SWMC.No.A7/4640/23

VOLUME-II B (TECHNICAL SCHEDULES)

31 / 07 / 2024

Contents

1 Schedule 1: Scope of Work 6

2 Schedule 2: Project Area Details 17

3 Schedule 3: BoV / E-rickshaw Parking Station Locations for Zone 5&6 18

4 Schedule 4: Transfer Station and Vehicle Workshop Locations of Zone 5&6 20

5 Schedule 5: Project Milestones 21

Schedule 6: Details of Minimum Waste Quantity to be delivered to decentralized units and centralized processing plant/dump site at Kodungaiyur** 23

6 Schedule 7: Domestic Hazardous Waste Deposition Centers 25

7 Schedule 8: Compliance Requirements 26

8 Schedule 9: Environmental and Social Management Plan for the Project 27

9 Schedule 10: Management Information System (MIS) 41

1.1 Reporting through MIS: 41

1.2 Complaint Redressal System: 42

1.3 Hardware & Other Components 43

1.4 GPS in All Vehicles 43

1.5 RFID (Radio Frequency Identification Reader) 44

1.6 Mobile Application for Reporting the Project Operations 44

10 Schedule 11: Scope of Work of the Independent Engineer 46

11 Schedule 12: Guideline for IEC Activities 52

1.1 Agency for Carrying out IEC Activity 52

1.2 Outline 52

1.3 Authority's Obligation 56

1.4 Monitoring and Reporting Requirements 57

1.5 Reporting System 57

1.6 Action Plan for Awareness Generation on SWM 58

12 Schedule 13: Guidelines for Social Safeguard 60

12.1 Avoidance of Interference : 60

12.2 Handling and Management of solid waste 60

12.3 Secondary Collection of Waste 60

12.4 Transportation of Solid waste 60
12.5 Engagement of staff and labor 60
12.6 Rates of Wages and Conditions of Labor 61
12.7 Persons in the Service of the Authority 61
12.8 Labor Laws 61
12.9 Working Hours 61
12.10 Facilities for Staff and Labor 61
12.11 Medical and Accidental Facilities 61
12.12 Supply of Drinking Water and Sanitation 63
12.13 Measures against Insects and Pest Nuisance 63
12.14 Prohibition of Alcoholic Liquor and Drugs 63
12.15 Festivals and Religious Customs 63
12.16 Funeral Arrangements 63
12.17 Prohibition of Forced or Compulsory Labor 63
12.18 Prohibition of Child Labor 63
12.19 Employment Records of Workers 63
12.20 Workers Organizations 64
12.21 Non-Discrimination and Equal Opportunity 64
12.22 Insurance for Concessionaire's Personnel 64
13 Schedule 14: Minimum Infrastructure Requirements for First Year 65
14 Schedule 15: Minimum New Infrastructure Requirements form year 2 to year 10 67
15 Schedule 16: Minimum Manpower Deployment for First year 72
16 Schedule 17: Minimum Manpower Deployment from Year 2 to Year 10 74
17 Schedule 18: Format for Performance Security 75
18 Schedule 19: Micro Implementation and Operational Plan (MIOP) 78
1.1 Consent, Clearances and Approval 78
1.2 Labor Absorption 78
1.3 Take over Plan 78
1.4 Route Plan/Beat-wise Plan for Primary Collection 78
1.5 Route Plan for Secondary Collection and Transportation 78
1.6 Route Plan for Collection of Street Sweeping Waste 78

1.7 Route Plan for Collection of DHW 79
1.8 Plan for Removal of Garden and horticultural waste 79
1.9 Asset Deployment Schedule 79
1.10 Allocation of Priority Services Team 79
1.11 Supply of minimum guaranteed waste to the decentralized units 79
1.12 Supply of waste to Dump site/Centralized Processing Facilities 79
1.13 Operation and Maintenance Plan for DHW Deposition Centers 79
1.14 Operation and Maintenance Plan of Static Compactor 79
1.15 Collection and Transportation of Solid Waste/silt from Canal/Riverbanks 80
1.16 TNUHDB Area Cleaning Activity 80
1.17 Management Information System 80
1.18 Complaint Redressal System 80
1.19 Financial Model 80
1.20 Asset Maintenance Schedule (O&M plan) 80
1.21 Litter Free Corridor plan 80
1.22 Disaster Management Plan 80
1.23 EHS Plan 81
1.24 IEC Plan 81
1.25 Seasonal Action Plan (SAP) 81
1.26 Carcass Disposal 81
1.27 Additional Services 81
1.28 Night Conservancy works 81
19 Schedule 20: Area Based Pro-Rata Rate Payment (ABPRR) 83
20 Schedule 21: Operation and Maintenance Plan 84
21 Schedule 22: Disaster Management Framework 86
22 Schedule 23: Project Site Office for IE 87
23 Schedule 24: Escrow Agreement 88
24 Schedule 25: Minimum Technical Specifications of Project Assets 94
24.1 Technical Specifications of BoV 94
The broad technical specification for BoV is being detailed as hereunder: 94
24.2 Technical Specifications of wheeled bin for Street Sweeping 95

24.3 Technical Specification of Pole Mounted Litter Bins 96
24.4 Technical Specifications of Refuse Compactor Bins of 1.1 M^3 Capacity 97
24.5 Technical Specifications of Refuse Compactors (14 cum capacity) 98
24.6 Technical Specifications of Refuse Compactors (8 cum capacity) 102
24.7 Technical Specifications of Tipper Truck (10 cum capacity with Stainless steel lining 4mm) 104
24.8 Technical Specifications LMV 106
24.9 Technical Specifications for Mechanical Sweeper. 107
24.10 Technical Specifications for BOV Bins 80 L Capacity. 109
24.11 Technical Specification for Backhoe Loader 110
24.12 Technical Specification for Skid Steer Loader 111
24.13 Technical Specification for Horticulture Vehicle (Pal finger with orange peel grabber). 113
24.14 Technical Specification for MCV vehicle 116
24.15 Technical Specification for Stationary Compactor. 117
24.16 Technical Specification for Hook loader- for stationery compactor. 118
25 Schedule 26: Key Performance Indicators, Monitoring & Evaluation, Penalty & Payment Calculations 121
25.1 Key Performance Indicators 121
25.2 Penalty Computation and Payment 126
25.3 Finalization of Evaluation Mechanism of KPIs during from takevoer period to COD 128
25.4 Evaluation Mechanism during O&M Phase (post COD) 128
25.5 Evaluation Mechanism during Disasters 153
25.6 Illustrative Example of Incentive Payment: 153
25.7 Example of Surcharge on Penalty: 153
26 Schedule 27: IAQ 156
27 Schedule 28: Indicative Route Chart for C&T 157

1 Schedule 1: Scope of Work

The Scope of Collection and Transportation of Municipal Solid Waste is appended hereunder.

A. Initial Total Area Cleaning (TAC)

The indicative locations of waste heaps are depicted in the following photographs: -



Waste beside pavement



Waste on Government Land



Garden waste & slab beside pavement



Waste near electric pole



Waste along road & vacant land



Waste beside Road



Waste along Canal Bank



Waste between TNUHDB Area



Waste along



Road/Lane/Street



Left over construction waste



Waste at street corner

waste at road junction.

In addition to that, old waste shall be collected from TNUHDB Area area, narrow street, dead end of road, above the manhole covers etc.

(a) The concessionaire, within 20 days from the effective date, shall do reconnaissance survey and prepare the "Initial Takeover Plan" (ITP), whereas the ITP shall include the following:
    (i) Indicative ward wise assessed quantity of legacy waste within the Project Area;
    (ii) Ward wise cleaning program.
    (iii) Equipment and manpower to be deployed.
    (iv) Schedule of lifting of old waste – daytime or nighttime.
    (v) Schedule of complete cleaning.
    (vi) Marking the location for bin placement.

(b) The Concessionaire shall deploy adequate number of vehicles like tipper truck, backhoe loaders, skid steer loaders etc. along with manpower to clean the Project Area as per the ITP. Whereas, the vehicles, material handling equipment/vehicles may be either owned by the Concessionaire or hired by the Concessionaire.

(c) The Authority shall deploy a special team to remove old vehicles, wooden items (old doors, furniture, sofas, beds etc which are Bulky waste items), stone/masonry items, or any other items which are not a part of waste.

(d) The Concessionaire shall desist from excavating the soil.

(e) The Concessionaire shall not collect any waste from the Private Land; however, the Concessionaire shall report to the Authority about the presence of waste which are unsightly. It is further clarified that the Concessionaire shall be only responsible for the removal of waste from the Authority's land or properties.

(f) The Authority shall deploy, at least one personnel or a team of its personnel along with IE personnel, who shall oversee the TAC activity on continuous basis and shall report the daily progress. In case of any hardship faced by the concessionaire to the Authority shall remove those hardship within 24 hours.

B. Taking over project area & Daily project Operations

1.1 Taking over of the Project Area

Parties agrees that, once a particular ward is cleaned as per the ITP, the Concessionaire shall start deploying manpower and machineries for taking over of the Project area.

1.2 Daily Door to Door / Primary Collection & Transportation of Solid Waste

Door to Door/Primary collection of Solid Waste from Households and All Markets (Vegetable Market, Fruit Market, Daily Market, Fish Market, Street Vendors etc.), Hotels, Restaurants, Banquet Hall, Institution, Other Commercial Establishments, and any other establishment as notified by the Authority.

a) The Concessionaire shall be responsible for providing time bound door to door primary Solid Waste collection services in the Project Area.

b) The Concessionaire shall be responsible to collect pre-segregated and/or unsegregated waste (as per KPIs) from waste generators. It is further clarified that if the concessionaire receives unsegregated waste continuously for 5 (five) days from a particular generator, then the concessionaire shall report

the same to the Authority, and on receipt of the complaint from the concessionaire the Authority shall take appropriate action against the defaulter and within one week the KPI computations shall be changed by IE by removing the habitual defaulter.

c) The Concessionaire shall ensure source-segregation the waste in three separate streams namely Bio-Degradable, Non-Biodegradable and Domestic Hazardous Waste and store separately in suitable bins (biodegradable waste in green color bin, non-biodegradable waste in blue/white color bin and domestic hazardous waste in jute bag). The Authority may provide a set of two waste containers for wet and dry waste and a jute bag for domestic hazardous waste to its citizens (household) for practicing waste segregation at home.

d) The Concessionaire shall display at each street the time- table of primary collection & transportation vehicles along with the toll free number (displayed in Tamil and English languages) to allow residents to give waste on prescribed time. The schedule of waste collection shall be also made accessible to public on the web-based application and at the Authority's website or as agreed and accepted in MIOP.

e) E-Rickshaws engaged in this service shall collect waste only from households/commercial establishments and not from any other source like malls, institutions, stadiums, temples, cottage industries, printing press, hotels i.e., those generators which are designated as bulk waste generators.

f) The Concessionaire shall be responsible for collecting segregated domestic hazardous waste from the households on bi-weekly basis and transporting it to the "Domestic Hazardous Waste Deposition Centres" for its safe storage.

g) The Authority shall establish one Domestic Hazardous Waste Deposition Centre for deposition of Domestic Hazardous Waste (DHW) for every 20 sq. km. of area of the Project Area for safe deposition of DHW. The Concessionaire shall dispose the DHW in compliance with existing rules and regulations notified by Tamil Nadu Pollution Control Board or dispose the DHW to TNPCB authorized concessionaire/contractor for its safe disposal as per the applicable Rules and good industry practice.

1.3 Collection & Transportation of Solid Waste from[1] Canal/River/ Large Drains:

a) The Concessionaire in consultation with the Authority and IE, shall identify the location of Waste hotspots along the canal/riverbank/ large drains (with the coordinates) during the preparation of MIOP. The collection point shall be selected such that, which is accessible through road and the lead distance from the collection point (Waste hotspot) to the vehicle (which shall receive waste for onward transportation) shall not be more than 10 meters. It is further clarified that thus collected waste shall only be Solid Waste, and the Concessionaire shall not be responsible to clear the drain silt or C&D waste or any other waste which is not Solid Waste.

b) The Concessionaire shall be responsible for the collection and transportation of only Solid waste lying at the banks of canals/rivers within the project area as per the frequency decided in MIOP.

1.4 Collection and Transportation of Solid Waste from Bulk Generators

a) The Concessionaire shall locate, identify, list, and assess the quantity of waste generated from those bulk waste generators along with Authority and IE representatives. Also, while preparing the initial

[1] Any water channel having average width of 1 meter and above.

MIOP the concessionaire shall also update the list of Bulk Waste Generator. The Authority shall issue notice to the Bulk Waste Generator (through Post, email, publication on website and SMS) about the appointment of the Concessionaire and Bulk Waste Generator shall hand over the Waste as per the Byelaw to the Concessionaire.

b) The Concessionaire shall be responsible for the collection and transportation of waste generated from Bulk Waste Generators separately. It is clarified that the Concessionaire shall not charge any additional fee either directly or indirectly from the Bulk Waste Generator either directly or indirectly.

c) The Concessionaire may supply collection bin ether on receipt of full payment or provide the specification of those bins where the Bulk Waste Generator shall procure its own cost. It is further clarified that if the specifications of Bin or the quality of bin is not as per the specification, the concessionaire shall not be responsible for collection of Waste from those Bin.

d) Thus, Bulk Waste Generator's Waste storage bin shall be such located that it is easy to load and unload in the Concessionaire's vehicle(s). It is clarified that the Concessionaire's personals shall assist the Bulk Waste Generator, in identifying such locations.

e) As the case may be, if some Bulk Waste Generator creates hardship to the Concessionaire, and the matter has to be brought to the notice to the Authority.

f) TNUHDB Area (either notified or not notified) and Informal Dwellings shall not be termed as the Bulk Waste Generator.

g) Parties agrees that the places of worship, Government Township, Government Offices, Big Government bungalows, gated community for public servants & public representatives, sports complex, parks etc., shall not constitute Bulk Waste Generators. It is clarified that the Concessionaire may at its own provide appropriate size bin.

1.5 Collection & Transportation of Horticulture and Garden Waste from public places

a) The Concessionaire shall be responsible for the collection of horticulture/garden waste generated from Public Places using specialized equipment.

b) The Concessionaire based on the location of the parks shall provide 1.1 M^3 bins for deposition of garden waste at Authority's maintained park.

c) The Concessionaire shall deploy separate vehicles for collection and transportation of horticultural/garden waste.

d) The Concessionaire shall achieve service standards and performs duties as per KPI mentioned.

e) The Concessionaire shall develop mechanism to collect the coconut shell separately and shall supply thus collected coconut shell to designated garden waste processing centers through a separate vehicle(s).

1.6 Street Sweeping, Collection and Transportation of Solid Waste

a) The Concessionaire, on daily basis shall perform either manual/mechanical sweeping of all roads, streets, pedestrian footpaths, and bus stops. The Concessionaire's performance shall be evaluated as per the KPI.





b) The Concessionaire shall collect litter, sweeping waste and drain silt (deposited on roadside) while doing street sweeping and thus obtained waste shall be deposited in the bin without mixing with any dry waste & biodegradable waste.

c) Special attention and action required from the Concessionaire:

(i) Removal of intruding material from the storm water inlet chamber screen. (*Indicative image below).*



Litter blocking screen



Litter Free screen

(ii) Removal of residual dust or dust pile or small gravels with sand or dust or accumulated road dust or sweeping waste etc. from the roadside. *(Indicative image below)*





(iii) The concessionaire shall not deposit the street sweeping waste either at private land or public land. (*Indicative image below)*



Litter around tree guard



Litter on roadside



Illegal packed waste

d) As the case may be, the Concessionaire may deploy high-capacity mechanical sweeper, for sweeping of National Highway (NH), Bus Route Roads (BRR) and Tamil Nadu Road Development Corporation roads (TNRDC) in the project area which are having width of 6 meters & above. Preferably, the Concessionaire shall do the mechanical sweeping of identified road in the MIOP during nighttime (10 PM to 6 AM).

e) The Concessionaire shall transfer the 'Street Sweeping Waste' into specified 1.1 cum covered RC bins (Black Color) or shall do alternate arrangement for the disposal of street sweeping waste as per the MIOP without mixing it with other waste to the designated waste disposal location.

f) The Concessionaire may in a time bound manner transport the street sweeping waste form SCP to the designated site using Refuse Collector cum Compactor truck having mechanical "Bin-Lifting" capability.

g) The Concessionaire shall ensure that at any time, the Street Sweeping Waste shall not be mixed with any other type(s) of waste till final disposal.

h) The concessionaire shall ensure the following activities to be performed regularly:









Removal of road seeping dust frequently.



Removal of weed, grass and small plants on pavements

1.7 Minimum Waste Guarantee to Centralized/Decentralized Processing Facilities:

a) The Concessionaire shall be responsible for providing the required quantum of segregated waste to the existing decentralized waste processing facilities. It is clarified that the Authority may increase or decrease the requirement of a particular kind of waste (feed)

b) In future, the Concessionaire shall also be responsible for providing the additional required quantum of segregated bio-degradable and non-biodegradable waste to the centralized/decentralized processing facilities to be set-up by the Authority in future.

1.8 Secondary Storage of Solid Waste

a) The bins shall be placed along the roads/streets as per CPHEEO Guidelines and shall be used only for the temporary storage of waste on day-to-day basis.

b) The Concessionaire shall provide covered (plastic lid) waste for the 1.1 cum RC storage bins having following colors, to receive different types of waste where the capacities shall be finalized during the approval of the first MIOP:

I. Biodegradable- green color bin (min. capacity 1.1 cu m)

II. Street sweeping waste - black colour bin (min. capacity 1.1 cu m)

III. Non-biodegradable – white/blue colour bin (min. capacity 1.1 cu m)

c) As the case may be, if the Concessionaire desires to place the higher capacity bin (dumper bin, normal skips or conical skips etc.) based on the locality and type of waste generated or any mechanism of waste compression (static compactor) to reduce the number of bins, the same capacity or mechanism shall be approved in the MIOP, whereas if the waste compression capacity has been created, then those initial waste compression capacities shall remain in operation till the end of the Concession Period.

d) As far as possible, the Concessionaire shall place three colour coded RC bins at each point/location for the storage of Biodegradable, Non-Biodegradable and Street Sweeping Waste. If the Concessionaire faces resistance for placing the bins, the number of bins may be reduced, however total storage capacity (including the compression capacity) shall remain unchanged for the entire project.

e) The Concessionaire shall not mix different waste streams (i.e., Solid Waste, street sweeping waste, drain silt, green waste, and C&D waste).

f) The concessionaire shall place the bins on the hard surface (either on the kerb side or suitably located on foot path). (*Indicative image below)*



1.9 Secondary Transportation of Waste

a) From the RC bins, Refuse Compactors of 14 cubic meter and/ or 8 cubic meter capacity or any other capacity as agreed in MIOP, shall transport segregated Bio-degradable, Non-Biodegradable and Street Sweeping Waste directly to Disposal Site at Kodungaiyur or any other site/plant designated by the Authority.

b) As the case may be, the Concessionaire shall desist from inter-mixing of segregated waste during entire phase of Collection and Transportation. However, if the Concessionaire receives the unsegregated waste, then the unsegregated waste shall be transported to the designated disposal location.

c) Refuse Collector cum Compactor of 8 cum capacity shall collect the waste from the commercial establishments/bulk generators and transport to the decentralized facilities/ centralized processing site at Kodungaiyur site for the final disposal as instructed by the Authority.

d) shall transport residual waste from the Resource Recovery Centre (RRC)/ Material Recovery Facility/ Micro Composting centers either to disposal point or to the processing facility.

1.10 Special Services

a) The Concessionaire shall deploy one vehicle per zone for collection and transportation of carcasses to the designated facility/ site as prescribed by the Authority during the preparation of MIOP.

b) The Concessionaire shall maintain a Priority Services team comprising of six workers per zone along with vehicles for activities which shall not be limited to street sweeping, removal of waste from SCP and sanitation, removal of horticultural waste, removal of carcass if any. The Concessionaire shall appoint one nodal person for coordination with Authority and IE. The Priority services shall be done within two hours of receipt of any request from the Authority/IE.

c) The Concessionaire shall perform regular services to TNUHDB Area as detailed hereunder. The Concessionaire shall

1. provide regular Solid Wase collection service like door to door collection & street sweeping;
2. do the Mass Cleaning of each TNUHDB every 15th calendar days where the Concessionaire shall deploy manpower and vehicles to
    a) clean the waste that is littered with the premises of TNUHDB;
    b) remove the Solid Waste deposited between the open spaces of two TNUHDB buildings/houses/tenements and sanitizing the entire area by using disinfectant;
3. inform the Authority to remove those waste which are not Solid Waste;

4. conduct regular IEC activities as per the approved MIOP;
5. assist Authority designated agency to carry our CSR works if any; and
6. assist the Authority in pre-monsoon work including services during natural calamities and disaster.

d) The Concessionaire shall perform hot spot clearance (like frequent public gathering locations like railway stations, bus stops, important offices, political gatherings, processions etc), as approved in the MIOP with the required manpower and vehicle requirements.

e) It is further clarified that services like poster clearances, banner removal, placards removal from the public places like central median, Authority building walls, park walls, street light poles and signage boards only, shall be performed by the Concessionaire on monthly basis.

1.11 Litter Free Corridor (LFC)

A. Purpose

To keep the entire Litter Free Corridor (LFC) always neat and clean without any sand or litter throughout the identified stretch.

B. Broad Scope of Work:

a) The focus of this is to sweep and clear waste from specified BRR roads.

b) The Solid Waste and sand shall be removed by manual and mechanical sweepers. The manual sweepers shall collect the dust and litter in 120 litre capacity bins which in turn shall be disposed in Refuse Compactor Bins.

c) Works such as fountains clearing, removal of animal waste & carcasses along the LFC shall be carried out.

d) The sweeping activity normally comprises of clearing of both the sides of the center median and footpaths.

e) The inlet chambers and chute pipe on the edges of the road shall be cleared by the manual sweepers.

f) Collection of waste from Litter bins placed along the LFC along with changing of garbage bags in the litter bins periodically based on the location.

g) All other identified locations such as Bus shelter, Market area, Metro station and wherever the floating population is high, the tilting type twin bins (Smart type) shall be placed and cleared by the respective route BOVs.

h) Besides the manual sweeping, BoV along with two helpers shall be deployed for litter picking in the area for every two hours. During the night time mechanical sweeper is to be deployed to clear the sand from the LFC road.

i) Manual sweeper shall individually be assigned to provide the service to a length of 500m to a maximum of 1000 meter per day in A & B shift.

C. Areas to be covered in Litter Free Corridor:

The following area of LFC to be covered in all two shifts (A&B) are described below.

a) Footpath, storm water inlet chamber including screen, both side of center median, shall be maintained as LFC by the Concessionaire.
b) Commercial Areas in LFC
c) Government Buildings, High Court, Hospitals, Railways Stations (only in the periphery of these buildings. Not inside this buildings)
d) Bus shelter in LFC
e) Markets in LFC
f) center median greenery area/plant box should be kept litter free.
g) Access to the public toilets in the LFC area.
h) The Concessionaire shall display a signage board at the established vantage point with the public message and helpline number for complaints.

The list of LFC to be maintained is attached as Annexure-I.

1.12 Other Conditions

a) The Concessionaire shall assign supervisors for monitoring and supervision of project operations throughout the Concession Period as per MIOP.
b) The Concessionaire shall transport the post processing rejects from MCC, RRC and MRF to the designated dump site/processing facility.
c) The Concessionaire shall not clear the solid waste dumped at vacant private lands; however the Concessionaire shall clear the solid waste dumped on the vacant land belonging to the Public[2].
d) The Concessionaire shall be responsible to prepare and develop the Micro Implementation Operation Plan (MIOP) for the collection and transportation of solid waste from households, bulk waste generators, commercial establishments etc. and shall submit the draft MIOP within 30 days from the Commencement date which shall in turn be evaluated by the Authority and IE.
e) The Concessionaire shall provide services as per Project Scope for 365 days in a year irrespective of any National Holidays, weekly holidays, Festivals and Political Force Majeure.
f) In case of any event of Political Force Majeure continuing for more than 3 working days, the Concessionaire shall notify the Authority and IE about its inability to render its services.
g) In consultation with the Authority and in line with SBM Guidelines/SWM Rules 2016, the Concessionaire shall on best effort basis, establish a system for integration of the informal waste collectors to facilitate their participation in formal solid waste management activities.
h) The Concessionaire shall, as part of MIOP prepare an O&M Plan. The O&M Plan shall be approved by the IE in consultation with the Authority. If such preventive maintenance schedule needs any modifications during the Concession Period, the IE shall approve those modifications by consulting with the Authority.
i) The services rendered by the Concessionaire to the Authority must conform to the provisions of SWM Rules 2016 and any amendment thereto in future. The concessionaire shall adhere to all applicable Rules/Laws/Policies.

[2] Land belonging to GoTN, GoI and the Authority excluding the vacant land like playground, parks etc. It is further clarified that land belonging to any PSU/Board/institutions shall be considered as Public Land.

j) The Concessionaire, while designing services pertaining to waste collection & transportation and street sweeping, shall put more emphasis on night conservancy works.

k) The Concessionaire, in consultation with the Authority and IE, shall identify the location of Hotspots along with the coordinates during the preparation of MIOP.

l) The Concessionaire shall be responsible for collection and transportation of drain silt to the designated location as per the approved MIOP whereas thus collected drain silt may be stored & transported along with street sweeping waste.

m) Collection and transportation of C&D waste shall not be the responsibility of Concessionaire.

n) The Concessionaire shall ensure that there is 24*7 (continuous) real time monitoring of core KPI's. The MIS system shall be compatible with the existing MIS system of the Authority.

o) The Concessionaire shall be responsible for setting up online Centralized MIS and 24*7 (continuous) Complaint Redressal System and shall indicate the space requirements for the same in MIOP. The Authority shall provide the required space to the Concessionaire. The Concessionaire shall be responsible to operate the Centralized MIS and Complaint Redressal System.

p) The Concessionaire shall be responsible for preparation of IEC Plan for creating awareness related to solid waste management while preparing the MIOP. The Concessionaire shall conduct the IEC Program as per the MIOP.

q) The concessionaire shall deploy at least one security guard at each Facility on continuous basis.

2 Schedule 2: Project Area Details

Zone	Total Number of wards (Ward Numbers)	Area (Sq.km)
Zone-5 (Royapuram)	15 (49 to 63)	21.81
Zone-6 (Thiru-Vi-Ka Nagar)	15 (64 to 78)	17.11
Total	**30**	**38.92**

The concessionaire may solicit the zone 5 & 6 maps from the Authority and shall prepare the route map based on the Authority's supplied map. The Authority warrants that the maps shall be provided to the concessionaire within 7 (seven) working days after the receipt of request from the concessionaire and in case there is delay the MIOP submission due date shall be modified and intimated by the Concessionaire.

3 Schedule 3: BoV / E-rickshaw Parking Station Locations for Zone 5&6[3]

S.no	Zone	Name of Location	Area (sqm)	Current status	Land Ownership
1	5	Ward-53 MCC at Basin Bridge Road	374.5	Functional	GCC
2		Ward-57 GCC General Workshop at Annapillai Street	273.0	Functional	GCC
3		Ward-55 Parthasarathy Bridge down Parking	136.5	Functional	GCC
4		Second Line Beach Road Ward-60 MCC	112.0	Functional	GCC
5		LFZ	17.5	Functional	GCC
6		C-Cattle Depot Ward-58 (Choolai) A P Road	101.5	Functional	GCC
7		Ward-59A Balamuthu Street Ellice Road	52.5	Functional	GCC
8		Ward-61 Old TPF at Iyya Street	178.5	Functional	GCC
9		Ward- 62 Athikesavan Street Chindatripet	84.0	Functional	GCC

S.no	Zone	Name of Location	Area (sqm)	Current status	Ownership of land
1	6	GKM colony Burial Ground	696.0	Functional	GCC
2		loco scheme 1st main road	250.0	Functional	GCC
3		Nermai Nagar burial Ground	400.0	Functional	GCC
4		Tangal burial ground	300.0	Functional	GCC
5		Tank link road apposite to DRPC school	1020.0	Functional	GCC
6		Near slaughterhouse	1250.0	Functional	GCC
7		Doctor Ambedkar collage road, old zone 3 office	192.0	Functional	GCC
8		Old Slaughterhouse Road	224.0	Functional	GCC

Asset Handing over: -

1. There shall be joint inspection by Concessionaire representative, Authority Representative and IE.

[3] It is clarified that locations are functional, and utility (Electricity, Drinking Water & sewage) connections already exists. The Concessionaire shall pay all the utility charges for smooth functioning of the facilities. It is clarified that for all utilities the Concessionaire shall pay the deposit charges as applicable subject to approval by the concerned utility department. In case the Authority has to pay the deposit charges, then the same shall be paid by the Authority and shall be deducted from the Concessionaire.

2. After the inspection the asset registry shall be prepared, which the Authority shall transfer to the concessionaire.
3. The asset registry shall have three sections:
   (a) Civil item list – all structural, roads, culverts, cattle traps boundary wall and utilities.
   (b) Mechanical item list
   (c) Consumables, fixtures etc list
4. The asset registry shall be signed by all the representatives as detailed in the para [1] above.
5. Once the asset is handed over to the Concessionaire and the Concessionaire completes the rehabilitation/ modifications/ upgradation / restoration, it shall submit the revised asset registry to IE for inspection and after inspection IE shall handover the registry to the Authority. IE shall complete the inspection within seven working days and failing which shall be deemed accepted by the IE.
6. Within 60 days of each anniversary date, the registry shall be updated by the IE and shall be sent to the Authority.
7. The Concessionaire shall hand back the asset to the Authority at the expiration date of the Concession or on the Termination Date of the Concession Agreement and thus handed back asset shall be same as the previous year asset registry.

4 Schedule 4: Transfer Station and Vehicle Workshop Locations of Zone 5&6

S.no	Vehicle Workshop	Zone	Area (Sq.m)	Ownership of Land
1	Opposite to Zone-5 Zonal office.	5	2,846.83	GCC
2	Nearby Perambur railway station.	6	4,954.00	GCC
Total			**7,800.83**	

S.no	Transfer Station	Zone	Area (Sq.m)	Ownership of Land
1	Elephant gate road	5	4,074.51	GCC
2	Otteri (non-operational)	6	5,168.79	GCC
Total			**9,243.30**	

Asset Handing over: -

1. There shall be joint inspection by Concessionaire representative, Authority Representative and IE.
2. After the inspection the asset registry shall be prepared, which the Authority shall transfer to the concessionaire.
3. The asset registry shall have three sections:
   (d) Civil item list – all structural, roads, culverts, cattle traps boundary wall and utilities.
   (e) Mechanical item list
   (f) Consumables, fixtures etc list
4. The asset registry shall be signed by all the representatives as detailed in the para [1] above.
5. Once the asset is handed over to the Concessionaire and the Concessionaire completes the rehabilitation/ modifications/ upgradation / restoration, it shall submit the revised asset registry to IE for inspection and after inspection IE shall handover the registry to the Authority. IE shall complete the inspection within seven working days and failing which shall be deemed accepted by the IE.
6. Within 60 days of each anniversary date, the registry shall be updated by the IE and shall be sent to the Authority.
7. The Concessionaire shall hand back the asset to the Authority at the expiration date of the Concession or on the Termination Date of the Concession Agreement and thus handed back asset shall be same as the previous year asset registry.

5 Schedule 5: Project Milestones

S.no	Milestone	Timeline from date of issuance Letter of Award (in Days)
(A)	(B)	(C)
1	Issuance of Letter of Award	0
2	Signing of CA - Commencement Date	30
3	Placement of Order of at least 80% of the Minimum Required Infrastructure for First Year	60
4	Submission of Draft MIOP	60
5	Response on Draft MIOP by IE (IE shall take approval from the Authority)	75
6	Submission of Revised MIOP (Version-I)	85
7	Response on Draft MIOP (version I) by IE (IE shall take approval from the Authority)	90
8	Submission of Final MIOP and Approval by Authority	95
9	Achievement of Financial Closure	100
10	Submission of Proof of 80% infrastructure availability including CCC completion – IE Asset Note to the Authority	110
11	Consent to Take Over[4]	115
12	Start of Take Over: The Concessionaire shall start- deployment of movable assets, deployment of manpower, installation of IT hardware & software, taking over of land parcels, taking over of BoV parking stations, taking over of static compactor location, taking over the command & control centre, taking over of vehicle parking stations & work shop etc. as per the approved MIOP and any such activities as incidental.	120[5]
13	Completion of Takeover: The concessionaire shall- complete the taking over of the Project Area by way of deployment of manpower and assets (as per the approved MIOP); complete the IT integration, complete the trial run for monitoring of KPIs; complete operation of the BoV parking station, complete takeover of static compactor locations, complete operation of vehicle parking locations and workshop, complete operation of command & control centre etc (as per approved MIOP), finalize the project SOP, finalize the MIS	210

4 As the case may be and subject to applicable condition of the Concession Agreement, the Concessionaire shall take over the Project Area entirely or phase wise irrespective of the approval of the MIOP, if the Concessionaire satisfies point no:10 as per the above table.

[5] From the start of taking over to the completion of taking over; the concessionaire shall be paid 90% of the IAQ as per the ABPRR framework.

	generation, app stabilized etc. as per the approved MIOP and any such action as incidental.	
14	Approval of KPI-SOP Hand book, trail run report, MIS report leading to Issuance of Final COD Certificate	230

Schedule 6: Details of Minimum Waste Quantity to be delivered to decentralized units and centralized processing plant/dump site at Kodungaiyur**

1	2	3	4	5	6	7
Year	**Total Waste (TPD)**	**Wet Waste to MCC (TPD)**	**Dry waste to MRF&RRC (TPD)**	**Dry Waste to Plastic baling units (TPD)**	**Coconut and garden waste (TPD)**	**Centralized Processing facility around Kodungaiyur disposal site (or) Kodungaiyur Waste disposal site (TPD)***
Year:1	1244.00	59.00	22.50	20.00	10.00	1133.0
Year:2	1260.00	59.00	22.50	20.00	10.00	1149.0
Year:3	1277.00	59.00	22.50	20.00	10.00	1166.0
Year:4	1293.00	59.00	22.50	20.00	10.00	1182.0
Year:5	1310.00	59.00	22.50	20.00	10.00	1199.0
Year:6	1327.00	59.00	22.50	20.00	10.00	1216.0
Year:7	1344.00	59.00	22.50	20.00	10.00	1233.0
Year:8	1362.00	59.00	22.50	20.00	10.00	1251.0
Year :9	1380.00	59.00	22.50	20.00	10.00	1269.0
Year:10	1398.00	59.00	22.50	20.00	10.00	1287.0

It is clarified that the details of existing decentralized Micro Composting Centers (MCC), Material Recovery Facility (MRF), Resource Recovery Center (RRC) and Plastic Baling Units (PBU) are provided in Volume III (Project Information Memorandum of this RFP).

Note:

(a) The waste diversion quantities mentioned in columns 3 to 7 may vary in the future.

(b) The Concessionaire shall fulfil the obligation of providing the required quantity of biodegradable and recyclable waste to the existing and proposed decentralized processing facilities on best effort basis, and the MIOP shall be amended accordingly. The tolerance level for columns 3 to 7 shall be + or - 10 %.

(c) till the centralized processing facilities becomes operational at Kodungaiyur, the remaining waste after diversion to decentralized plants shall be transferred to Kodungaiyur waste disposal site.

(d) In case the Kodungaiyur waste disposal site is relocated, the extra distance shall be determined by new round the trip kilometer minus old round the trip kilometer as per the route plans finalized in MIOP. The distance travelled by the Vehicle shall be monitored by Global Positioning System (GPS). The differential distance shall be paid as per the

Mechanical Department Rate of Greater Chennai Corporation which shall be Rupees Per Metric Ton Per Kilometer. (Note: This clause shall only be applicable for Secondary C&T Vehicles[6])

[6] For the purpose of this proviso the Secondary C&T Vehicle shall mean all types of Refuse Compactors more than 8 cubic meter capacity and skips vehicles but excludes BoV's, small tipper trucks and any other vehicles having less then 8 cubic meter capacity .

6 Schedule 7: Domestic Hazardous Waste Deposition Centers

1. Concessionaire shall be responsible for collecting segregated Domestic Hazardous Waste from the households at least bi-weekly and shall transport thus collected DHW to the DHW Depositing Centre for safe storage.
2. The Concessionaire shall notify the timing and schedule of receipt of DHW waste collection.
3. As per SWM rules 2016, the required DHW Deposition Centers in Project area shall be 2.
4. *"As per SWM Rules 2016, One DHW Depositing Centre shall be established for every 20 sq. km. of area,"* hence the Authority warrants that, suitable locations[7] where the DHW depositing center can be established shall be identified within 90 days of the commencement date. The Authority shall be constructing the DHW Deposition Centre as per the applicable law/ rule and shall hand over the thus created DHW Deposition Centre to the concessionaire. The process of handing over of the DHW Deposition Centre shall be in line with the provisions of handing over of the asset as detailed in the Schedule-4 under heading of "Asset Handing over".
5. The DHW Depositing Centers shall be maintained by Concessionaire during the Concession Period. The Concessionaire shall provide adequate manpower and allied fixtures for the safe functioning of Deposition Centers as specified under KPIs.
6. The Concessionaire shall safely keep the DHW at the DHW Depositing Centers and shall handover the DHW to the agency appointed by the TNPCB/Authority.
7. The Authority shall in consultation with the TNPCB shall ensure that collected DHW shall be safely transported / evacuated from the DHW Depositing Centers and disposed as per the applicable law / rule to the designated disposal facility/ site as notified by TNPCB. The timings and frequency of clearance of waste in DHW Depositing Centers shall be decided by the Authority. It is further clarified that if the DHW is not removed from the facility by the Authority, the KPI pertaining to DHW Deposition center shall remain functional.
8. The Concessionaire shall perform IEC activities for waste generators for separate storage of DHW and its safe handover.
9. The DHW centers shall comply with the below mentioned requirements.
   i. Must be completely enclosed.
   ii. Must have decontaminated area for personnel and equipment.
   iii. The building units shall be chemically compatible with the hazardous waste.
   iv. Must have a leak detection system to indicate any failure in the integrity of floor.
   v. It must be open form 8.00 am to 8.00 pm to receive the DHW.

[7] The Concessionaire may construct the temporary DHW deposition center at the Kodungaiyur waste disposal site if the locations for DHW deposition centres are not finalized and till such time the Concessionaire shall maintain the temporary DHW deposition center.

7 Schedule 8: Compliance Requirements

Table 1: Applicable Permits

S.No	PERMIT	AGENCY
1	**Permits for driver**	
	Permanent driving license depending on vehicle type.	Transport Department, Government of Tamil Nadu.
2	**Permits for Vehicles**	
A	Vehicle Registration	Transport Department, Government of Tamil Nadu.
B	Fitness Certificate	Transport Department, Government of Tamil Nadu.
C	Pollution Control Certificates	Transport Department, Government of Tamil Nadu.
D	Driving license[8]	Transport Department, Government of Tamil Nadu.
3	Water & Sewer Connection	Chennai Metropolitan Water Supply and Sewerage Board (CMWSSB)
4	Application for PAN and other tax registrations including Service Tax	Concerned Department of Government of India and Government of Tamil Nadu
5	Clearance for employing Labor –Primary Employer	Commissioner of Labor
6	Employment of migrant Labor	Commissioner of Labor
7	Fire safety equipment	Government of Tamil Nadu / Police Department
8	Working in night shifts	Authority / Police Department
9	Insurance of Vehicles	Any concerned Insurance Company
10	Electricity connection	TANGEDCO
11	Any other applicable permit	Concerned Authority

The Concessionaire shall adhere to all Applicable Law, Applicable Rule, Applicable Court Order's, Order Issued by the competent authority. The Authority reserves the right to issue notice(s) to the concessionaire in case the issue of non-compliances are brought to Authority's notice or discovered by the Authority itself.

[8] Driving License applicable for E-Rickshaw as well.

8 Schedule 9: Environmental and Social Management Plan for the Project

S. No.	Aspect	Mitigation measures	Responsibility	Phase	Monitoring method	Monitoring indicator	Frequency
Pre-Operation & Operation Phase							
1.1	Project Design	Ensure that the overall project design of collection and transportation adopts best available methods for the proposed project which cause minimum environmental and social risk and impact during the project cycle;	GCC/IE, Concessionaire	Pre-Operation Phase	Review the performance of design and technology and route decided for the project; and consult the experts and learn from the experiences gained from such projects elsewhere	Minimum E&S risk and impact; Minimum or no impact on local ecology, water bodies and forest; Minimum impact on land and livelihood of local communities; and cost effective and O&M efficient.	Once
1.2	Permits and approvals	Obtain all permits and approvals required for E&S aspects required for the proposed project during the project operations.	GCC/Concessionaire	Pre - Operation & operation Phase	Keep record of all permits, approvals, and authorizations	Permits and approvals are available	One time
1.3	Labor accommodation and facilities	Identify suitable locations with sufficient area for security, basic amenities, first aid etc.	Concessionaire	Operation Phase.	Visual inspection; Consultations with labor, and local	All the facilities available as per law and standards;	Everyday

S. No.	Aspect	Mitigation measures	Responsibility	Phase	Monitoring method	Monitoring indicator	Frequency
		Follow all relevant provisions of the Contract Labor regulation and guidelines for Workers. Follow all international and national regulations for Safety of workers. applicable laws for rented labor accommodation; Provide adequate number of toilets and uncontaminated water for drinking and washing; Adequate healthcare is to be provided for the workforce; Ensure adequate water supply in all toilets and urinals; Provide separate toilets/ bathrooms for women laborers and shall be screened from those for men (marked in vernacular language. Ensure rest area is provided for the workers. Provide first aid medical kit at labor accommodation and at working site; train the labor for usage of items in injury,			communities nearby; Site inspection; Facilities made available; Type of illness and its causes; and Discussions about the level of health awareness and safety precautions taken by the workers while working.	Assess the satisfaction level of laborer's; Easy access of first-aid box with required medicine and accessories at each working site, labor accommodation, labor, and office to workers all the time; and Arrangement made with the Doctors at then nearest government health and medical center/ private clinic	

S. No.	Aspect	Mitigation measures	Responsibility	Phase	Monitoring method	Monitoring indicator	Frequency
		emergency, coordinate with nearest government and private medical centers for the medical services, display the contact number of medical doctor(s) and keep a vehicle for emergency travel all the time; As per provisions of WHO and MOHFW guidelines of Covid-19, sanitizer, soap, mask, etc. shall be made available in sufficient quantity and its use by the workers mandatorily and maintain social distancing all the time; Ensure medical tests and treatment of Covid-19 positive cases immediately; and Maintain the required data and documents at site and regularly submit the compliance report to the IE.					
1.4	Public disclosure	Conducting FGDs and small group consultations. Publication about project features in Print-Newspaper, Newsletter / leaflets/ Pamphlet and through Radio information capsules. Internal department communication.	GCC/IE, Concessionaire	From pre-operation phase till decommissioning phase	FGDs, public disclosure through the indicated means with people residing in project area, GCC	Meeting copies, videos, Photo clippings etc.	Pre- operation twice Operation phase- Monthly

S. No.	Aspect	Mitigation measures	Responsibility	Phase	Monitoring method	Monitoring indicator	Frequency
					staffs, elected representatives		Decommissioning - twice
1.5	Grievances redressal system	Establish the efficient grievance redressal mechanism and accordingly constitute the grievance redressal committee (GRC) as outlined in the ESIA project level with representatives of all the stakeholders as members, including women and vulnerable groups of local communities; Ensure the wider publicity of procedure, functioning and availability of GRC since the inception of the project; All the grievances received shall be acknowledged and proper recording and tracking shall be carried out; Convenor will be the coordinator for organizing GRC meetings as required, writing the proceedings, minutes of meeting, informing the aggrieved party about the decision of GRC, etc;	GCC/IE, Concessionaire	Project life cycle	Review the proceeding and minutes of meetings; and Consultations with the members of GRC.	GRC established; GRC meetings held; Number of cases received and resolved as registered in the grievance register; Decision taken with in a timeframe; and Court case filed or withdrawn.	Monthly

S. No.	Aspect	Mitigation measures	Responsibility	Phase	Monitoring method	Monitoring indicator	Frequency
1.6	Submission of updated environmental & social management plan (ESMP) / site environmental plan (SEP); ESMP implementation and reporting	The concessionaire will prepare an implementable ESMP plan which will be followed throughout the entire project period. The ESMP measures will be with respect to air, water, noise, leachate, and social aspects related to the project.	Concessionaire	Operation phase	Review of reports and records	Compliance at the site	One-time / As and when need arises
1.7	Appointment and Mobilization of qualified Environment & Safety Officer	The concessionaire will appoint a qualified and experienced qualified Environment & Safety Officer (ESO), who will be mobilized prior to start of works. ESO will dedicatedly work and ensure implementation of Environmental Management Plan including Occupational, Health and Safety measures during the project implementation.	Concessionaire	Operation Phase.	Review reports and records	Appointment of qualified ESO by concessionaire as per RFP	One time

S. No.	Aspect	Mitigation measures	Responsibility	Phase	Monitoring method	Monitoring indicator	Frequency
1.8	Labour deployment and management	Based on the manpower requirement for project during operational phase the Concessionaire will deploy the manpower accordingly. Concessionaire shall prepare a Labor Management Plan which shall be reviewed by the Engineer in charge of IE and approved.	Concessionaire, IE/GCC	Operation Phase.	Review site management and labor plan; and Site inspection	Number and date of labor mobilization; and Date of starting works.	Periodically
1.9	Traffic management	Concessionaire shall prepare a Traffic Management Plant in consultation with GCC/IE where the collection and transportation activities causes minimal traffic disturbance. The vehicle routing shall be in such a way that vehicles involved in collection and transportation to be done only during less traffic hours. Ensure that the vehicles follow speed norms of the traffic department; and Investigate and respond to complaints about	Concessionaire, GCC/ IE	Operation Phase.	Review traffic management plan; and Site inspection	Implementation of traffic management plan adequately; Number of complaints received; and Incidence of accidents	Daily

S. No.	Aspect	Mitigation measures	Responsibility	Phase	Monitoring method	Monitoring indicator	Frequency
		traffic.					
2.0	Noise due to vehicle movement	Ensure that all the vehicles that are involved in collection and transportation are serviced/maintained regularly. Concessionaire to maintain the proper record for all the vehicles and machinery which shall have the valid fitness certificate, NOC, insurance, etc. The vehicle movement shall be regulated so that there is less traffic, and less honking is done. Ensure noise level in the residential and industrial areas within the permissible limit;	Concessionaire	Operation Phase.	Review of monitoring records Random Noise measurements	Level of noise generated; and Number of registered complaints	Regularly
2.1	Dust emissions	Vehicles/trucks carrying municipal solid waste shall be covered with tarpaulin sheet to avoid spillage; Periodic emission check for vehicles. Vehicles having PUC Certificates will be used during construction.	Concessionaire	Operation Phase.	Site inspection;	Emission from project area and nearby roads used for transportation;	Regularly

S. No.	Aspect	Mitigation measures	Responsibility	Phase	Monitoring method	Monitoring indicator	Frequency
		Provision of Personal Protective Equipment such as face mask, gloves, nose masks & goggles for all the workers.				Number of complaints received.	
2.2	Air quality	Vehicles having PUC Certificates will be used for collection and transportation All the vehicles used in the project shall be BS-VI compliant vehicles. Maximize the use of E-vehicles to avoid vehicular emissions. Stack heights if any for DG sets to be maintained in accordance with CPCB/MoEF norms; Provision of Personal Protective Equipment such as face mask, gloves, nose masks & goggles for all the workers.	Concessionaire	Operation Phase	Site inspection;	Fuel emission from vehicles; and Number of complaints received.	Regularly
2.3	Odour	Use of herbal sanitizer and deodorizer for control of odor if any that is generated during waste collection and transportation.	Concessionaire	Operation Phase	Site inspection and review of odor control measures,	Odor mitigation measures followed; and	Regularly

S. No.	Aspect	Mitigation measures	Responsibility	Phase	Monitoring method	Monitoring indicator	Frequency
						Number of complaints received.	
2.4	Water Quality (Ground and surface water)	The wastewater generated from workshop and static compactors shall be collected & treated separately in Effluent Treatment plant for proper treatment and disposal. Preparation of spill response plans, particularly for fuel and oil storage areas.	Concessionaire	Operation Phase.	Site inspection; and Review of spillage control measures.	Fuel or lubricant spillage and Treated effluent characteristic from effluent treatment plant.	Regularly
2.5	Safety of workforce	The workers and concessionaires involved in the proposed project activities will be trained on the necessary precaution and safety practices prior to commencement of operations; Ensure availability and mandatory use of PPEs at the site;	Concessionaire, GCC/IE	Operation Phase.	Site inspection; and Observation of workers with PPE and safety measures while working.	Quantity and timely supply of PPEs; Awareness level about the use of PPEs; and	Everyday

S. No.	Aspect	Mitigation measures	Responsibility	Phase	Monitoring method	Monitoring indicator	Frequency
		Ensure sufficient quantity of all PPEs, necessary safety appliances such as safety goggles, helmets, boots, safety belts, ear plugs, mask, etc. to workers and staffs; First Aid centers with facilities to be provided. Emergency Preparedness plans shall be prepared and implemented for all manpower working and its field extension centers. An Environment Health & Safety policy shall be prepared and implemented throughout the activities area; The site shall be provided with ambulance and shall contain the number of nearby hospital phone number; Provision of fire extinguishers, fire hydrant system, fire engine to be provided at site in case of emergency and all the staff shall be trained on how to handle in case of fire				Incidence of injury, accident, infirmity.	

S. No.	Aspect	Mitigation measures	Responsibility	Phase	Monitoring method	Monitoring indicator	Frequency
		accidents; Hazard Identification & Risk Assessment analysis shall be prepared for all activities; The concessionaire will comply with all the precautions as required for ensuring the safety of the workmen as per the International Labor Organization (ILO) and applicable laws of India and Tamil Nadu state as applicable. The Concessionaire shall provide sanitary facilities for the female workers at all the attendance locations[9].					
2.6	Fire Safety	Ensure that sufficient and certified firefighting equipment are placed and maintained required for project activities. Equip all fuel stores and storage areas with fire extinguishers; Provision of fire extinguishers, fire hydrant	Concessionaire	Operation Phase.	Inspect Attendance registers for firefighting training conducted; and Observation of fire extinguishers and	Number of Fire incidents; Certified extinguishers in appropriate locations; and	Periodically

[9] Attendance locations shall mean the locations where the Workers assemble daily at the start of work and register their presence for attendance.

S. No.	Aspect	Mitigation measures	Responsibility	Phase	Monitoring method	Monitoring indicator	Frequency
		system, fire engine to be provided at site in case of emergency and all the staff shall be trained on how to handle in case of fire accidents. Ensure that all workforce and staff on site are aware of the location of firefighting equipment on the site; and Conduct training program on use of extinguishers, sand, etc for firefighting and ensure that they are trained in its operations.			certificate at the sites.	Worker's knowledge to operate the fire extinguisher.	
2.7	Emergency response to manage cyclone and other disaster conditions	Concessionaire shall ensure efficient communication system in place which will be required during occurrence of any natural hazard; Evacuation plan shall be in place for the site; Evacuation plan or route is displayed clearly through signs or picture at prominent places within the sites; Ensure effective coordination within the workforce and concerned departments and display contact number of concerned persons at prominent places; and	Concessionaire, GCC/ IE	Operation Phase.	Inspect attendance register for training program; and Inspect fire extinguishers and certificate	DMP in place; Communication system in existence; Display of evacuation route; Capacity of workers to manage; and	When required

S. No.	Aspect	Mitigation measures	Responsibility	Phase	Monitoring method	Monitoring indicator	Frequency
		Earmarking of assembly points. Conduct training program and mock drills to workers to deal with the disaster situations due to occurrence of cyclones and tsunami.				Disaster and emergency situations	
Social aspect							
2.8	Compensation and Assistances to potential temporary economic impacts	(i) Temporary (NULM) workers shall be absorbed by the Concessionaire to the maximum extent possible subject to their employment norms. (ii) Permanent Workers shall be redeployed to GCC managed Zones (4,7 and 8).	GCC & Concessionaire	Pre - Construction Phase	Labor Absorption Plan	All C&T workers in Zones 5&6 to be absorbed/ adjusted within the three options before COD	Every week from CA signing till COD
3.Decommissioning phase							
3.1	Site clearance and rehabilitation/ Post-operation clean-up	Remove all equipment, vehicles, surplus materials, site office facilities, temporary fencing, structures, and other items from the project area; Clean up and remove any spills and contaminated soil in the appropriate manner; Ensure the project area is fully clean and tidy before the exit and prior to its handover to	Concessionaire	After completion of operation phase	Site inspection; and Review of record of activities upon completion of construction phase and commissioning phase	Restoration of construction sites in original condition; and Sites are fully rehabilitated prior to commissioning of project	Weekly

S. No.	Aspect	Mitigation measures	Responsibility	Phase	Monitoring method	Monitoring indicator	Frequency
		the officer of GCC and other authorized persons.					

9 Schedule 10: Management Information System (MIS)

a) The Concessionaire shall set up Command and Control Centre (CCC) for monitoring the day to day Project Operations at the location agreed between the Parties.

b) The space requirement shall be indicated by the Concessionaire in MIOP and space required for CCC shall be provided by the Authority which shall be an RCC structure only.

c) The Concessionaire shall be responsible for installing, commissioning and operating the hardware and software system where the system shall be such that the real-time tracking of project operation shall be achieved as per the Good Industry Practice. The Authority/IE shall deploy at least one representative in CCC who shall monitor the project operations on continuous basis.

d) The Concessionaire shall set up an automated Management Information System (MIS) which shall generate information related to project in a prescribed format. The system shall be designed such that a provision to feed the information "manually" in case information is not obtained automatically.

e) The Concessionaire shall be responsible for providing data or information required for generating reports for project monitoring as per the approved MIOP formats.

f) The Authority may suggest more automation from time to time, to enhance the effective monitoring of the Project.

g) The Concessionaire shall also set up 24 x 7 Complaint Redressal System for handling complaints related to the Project Operations.

h) The Concessionaire shall be responsible to Operate the CCC and Complaint Redressal System throughout the Concession Period.

1.1 Reporting through MIS:

a) The Concessionaire shall be responsible for deploying required hardware and installing the licensed software system for generating on demand automated reports for continuous monitoring of Project Operations. The System shall comprise of following, but not limited to the below mentioned.

1. Iris Scanner enabled Biometric Attendance System shall be installed at all the Ward/Division Offices within the Project Area. The Authority shall provide the suitable locations in every ward to the Concessionaire for setting up Biometric Attendance System.
2. The Concessionaire shall install GPS devices in all the Primary and Secondary Collection Vehicles and Mechanical Sweepers which shall enable real-time tracking of vehicles at the Control Room.
3. The Concessionaire shall install RFID Tags with unique codes on Primary Collection Vehicles, RC bins and wheeled bins and these unique codes shall be used in the MIS Reports.
4. The Concessionaire shall install Infra-Red Cameras on the Refuse Compactors and Static Compactors for monitoring of waste collected and transported.
5. The Radio Frequency Identification Device (RFID) tags in the RC vehicles shall be placed in such a way that the signal shall be transmitted to the Control Room only when the RC bin has been lifted and emptied by the RC vehicle.
6. The helpers travelling with the Secondary C&T vehicles shall take a minimum of two time and date stamped photographs along with the location (Latitude & Longitude) (Pre and Post

unloading) of the bins and these photos shall be immediately transmitted to the control room via the dedicated app.

7. The Concessionaire shall provide geo-fenced cellular handsets to the entire supervisory staff of primary collection and secondary transportation as well as street sweeping which shall get activated/deactivated once the personnel enters/ exits from her designated work periphery, which shall be detailed in the personnel wise beat plan in the Approved MIOP.
8. The litter free corridors shall be Geofenced and dedicated vehicle assigned for the task including the cellular phone of the employees shall monitored in the Geofenced area. It is further clarified that the concessionaire shall have the option to change the assigned vehicle but shall be notified to the IE/Authority at least 02 (two) hours before the commencement of service for that particular day.
9. The TNUHDB Area shall be Geofenced and dedicated vehicles assigned for the task including the cellular phone of the employees shall be monitored. It is further clarified that the concessionaire shall have the option to change the assigned vehicle but shall be notified to the IE/Authority at least 02 (two) hours before the commencement of service for that particular day.
10. The Concessionaire shall also conduct manual supervision of activities, which cannot be tracked through automated system (Refer Schedule 26 on KPIs).
11. The Concessionaire shall develop a mobile application to monitor the Project Operations on day-to-day basis on a real time basis.
12. The IE shall develop formats for arranging data into meaningful information having features for automated data capture including supervisory control for manual data entry (only in case of system glitches) in consultation with Authority & Concessionaire.
13. The data generated from automated systems and mobile application shall be directly accessible to IE and the Authority through dashboard.
14. The Concessionaire shall compile and submit the KPI data in the formats as approved in the MIOP or agreed between the parties or as approved by the Authority.
15. The Concessionaire shall submit Daily, Weekly, Fort-nightly, and Monthly reports as per the reports agreed in the MIOP to the IE, and IE shall after verification shall send those reports to the Authority.

b) IE shall be responsible to prepare Monthly Performance Reports (MPR) and submit the MPR to the Authority. The MPR shall form basis for calculating monthly penalties and payments to the Concessionaire.

1.2 Complaint Redressal System:

a) The Concessionaire shall develop and implement a standard operating process for operating a 24 X 7 Complaint Redressal System for handling complaints related to Project Operations.

b) The Concessionaire shall provide access to Authority/IE to online platform for the logging complaint and tracking the complaint redressal / status.

c) The Concessionaire may also enable the system to register the complaint through SMS and provide the status through Automated SMS.

d) The Concessionaire shall install a minimum of 3 (three) dedicated phone lines which shall be operational 24X7 in the Control Room to receive complaint from Public. The efficacy shall be further assessed during the initial MIOP preparation stage as well as during the Project concession period. I

e) The Concessionaire shall maintain records of Complaints received that includes name, date, time, location, type of complaint and the subsequent action taken to solve the complaint. This record shall be made available by the concessionaire for verification by IE and the Authority.

f) The concessionaire shall at least records some calls for reviewing the quality of interaction. This recording shall be made available to IE and the Authority as and when demanded.

g) As the case may be, the complaint redressal shall be done by the Concessionaire within 6 hours of receipt of such complaint which relates to daily operational activities.

h) As the case may be, as far as possible the Concessionaire shall redress any complaint related to infrastructure replacement within 24 hours on receipt of complaint being recorded.

i) As the case may be if the redressal of the complaint cannot be carried out within the prescribed timeline as detailed in (g) and (h) above, the Concessionaire shall notify to IE and the Authority with reasonable justification for the delay and expected timeline to redress the complaint. In case the justification is not accepted by the Authority, the Authority shall issue notice to the Concessionaire.

1.3 Hardware & Other Components

The Concessionaire shall deploy the hardware and software system with due intimation to the Authority and IE. As the case may be the Authority may direct the Concessionaire to provide direct feed of data to the Authority's managed Integrated Command and Control Center (ICCC) for data mirroring.

1.4 GPS in All Vehicles[10]

The Concessionaire shall install GPS system in all the vehicles in including primary collection vehicles with following device specification or better:

a) General Specifications**:**
   i. Dual band GPRS (900/1800 MHz).
   ii. On-board Storage of at least 2 days of data.
   iii. Internal battery to sustain operation for at least 10 hours with a minimum recording at interval of 30s and reporting at intervals of minimum of 120s.
   iv. A minimum reporting interval of 30s.
   v. Alerts on external power disconnection.
   vi. Internal antenna or antenna wire enclosed in metal sheath.
   vii. IP 65 enclosure (i.e. waterproof for occasional sprays of water and dust proof).
   viii. Device shall be hidden – minimum of -161db gain for GPS antenna.
   ix. Ability to work against sustained external voltage of up to 33v and handle transient of as high as non-spike 55v/6000 Joules spikes (To work in presence of hydraulics, falling battery).
   x. Digital Input: 2 minimum. Changes to digital input must be communicated immediately – i.e. changes shall not be missed because it falls in between recording interval. On the other hand transients (< 1-2s) must be discarded.

[10] In case the vehicle is already in-built with GPS provided by OEM supplier, the specifications shall not apply.

xi. Analog Input: 1 minimum

b) Accessories:

i. Must be able to detect engagement of bin's raising/lowering.

ii. Must be able to detect raising/lowering of tipper's body

c) GPS Running Requirement

i. 98% of installed GPS shall be operational all the time.

ii. Any non-operational GPS shall be replaced within 24 hours of time of non-functioning.

iii. If any GPS is not operational (within the above limits), driver shall be provided with android/Mobile Application enabled phone with location tracking capability and same shall be monitored by Concessionaire

1.5 RFID (Radio Frequency Identification Reader)

i. RFID tag in non-breakable, non-temper & non-removable enclosure shall be fixed on all key project assets by the Concessionaire. Key assets shall include (but not limited to):

ii. 1.1 cum RC bins

iii. E-Rickshaw

iv. Equipment

v. RFID tag shall contain information such as Asset type, Asset no., purchase date, insurance details, servicing schedules, date of replacement if any, any other information.

vi. Vehicle RFID Tags shall store Information in RC and Insurance details, in structured format.

vii. The Concessionaire shall provide (2 RFID Readers per ward) including inbuilt display to read RFID tag information. These readers shall be fitted with GPRS module and information shall be relayed to the asset records on server indicating asset information.

viii. Concessionaire shall replace the damaged RFID Tag within the 24 hours' time of non-functioning. New RFID tag in place of damaged tag shall be fixed with the same information.

1.6 Mobile Application for Reporting the Project Operations

The Concessionaire shall provide robust mobile applications to report the Project operations. Following are minimum requirements for the mobile application:

i. Mobile application shall be able to send information to control room about the ground situation along with "Photo", "Geo-Tag (latitude-longitude) and Status update.

ii. This mobile application shall work even when GPS connectivity is not there and the moment GPS connectivity is available, data shall be uploaded to the servers.

iii. Data collected from this application shall not be alterable by the originator.

iv. This application may be used for (but not limited to):

(A) Report Arrival of Collection Vehicle by sending photograph of street.

(B) Report Arrival of Refuse Compactors for clearing of bins from Secondary Collection Points

(C) Reporting after clearing Silt

(D) Reporting after clearing road sweeping

(E) Reporting of any other activities related to Project operations.

(F) Reporting after cleaning of river/canal banks

d) Concessionaire shall also train all their staff to use the application.

e) Bio-Metric Attendance

i. The Concessionaire shall deploy Iris Scanner enabled biometric attendance system for all the Ward/Division Offices under the Project Area, to report staff attendance. Following are minimum requirements:

1. The Attendance System shall display each record instantaneously to the central server.
2. Only records received from attendance system shall be treated as valid records for staff reporting – in reports generated from servers.

f) CCTV Cameras:

The Concessionaire shall install CCTV cameras at BOV parking locations, vehicle workshop, static compactor locations, parking locations and vantage points (as decided mutually between the Authority and the Concessionaire) for regular monitoring. As the case may be, the Authority shall direct the Concessionaire to provide live feed of the cameras installed at vantage points for monitoring at ICCC of the Authority.

10 Schedule 11: Scope of Work of the Independent Engineer

IE shall appoint relevant staff/personnel for daily monitoring of Project Implementation and Operations after the signing of its IE Service Agreement with the Authority or the Authority assigned Institution. IE shall appoint minimum staff for monitoring of Project Implementation and Operations activities as given below:

Sl. No.	Key Professionals	Nos*
1	Team Leader	1
2	Deputy Team Leader	1
3	IT/MIS Manager	1
Sl. No.	**Professionals (indicative)**	**Nos**
4	Finance Officer/Expert	1
5	Manager-Contract Management	1
6	Social Development/IEC Specialist	1
7	Manager-EHS	1
8	Zonal Manager	2
9	Zonal Assistant Manager	4
10	Executive- Contract Management & finance	2
11	Executive-Social/ IEC	5
12	Executives- IT/MIS	4
13	Monitoring Supervisors	20
14	Executives- EHS	2
	Total	**46**

Objective:

a) Act independently, as per the provisions of Concession Agreement and review all activities associated with Project Implementation and Operation to ensure compliance to the Concession Agreement;

b) Assist Parties to this Concession Agreement in arriving at an amicable solution of any project implementation and operational issue, if any;

c) Report to Authority on the technical and financial aspects of the Project on daily/continuous basis; and

d) Act, if required on behalf of the Authority and fulfil various reporting requirements regarding Project Implementation and Operation, except on decision making.

Role of the Independent Engineer

The Independent Engineer ("IE") is expected to play a positive and independent role in discharging its functions, thereby facilitating the smooth Project Implementation and Operation of the Project during the Implementation

Period and Concession Period. The Independent Engineer shall oversee the assigned activities as per this Schedule. Broadly, the role of the Independent Engineer shall be:

a) Appraise the MIOP and shall make recommendations to the Authority for its approval.
b) Review the activities associated with but not limited to, Project Design, Project Plan, Procurement of Project Assets, Quality of Project Assets, overseeing DHW Depositing Centre Design and implementation, Vehicle Parking and Workshop implementation, Project Implementation Schedule, Reporting Construction/ rehabilitation of project physical assets, Implementing Project Operation and Maintenance Manual as per the approved MIOP, Project Monitoring and verification of Insurance, statutory compliances, EHS, Applicable Consent and Clearances and Project Scope of Concessionaire to ensure compliance as per the Approved MIOP;
c) Report to the Authority on the various physical, technical and financial aspects of the Project based on daily/continuous basis;
d) Assist the Parties on arriving at an amicable settlement of disputes, as the case may be;
e) Review and report to the Authority related to the social & health issues and safety & environment.
f) IE Shall continuously monitor, on daily basis, the operations of the project activities, authenticate the daily reports submitted by the Concessionaire and generate its own report for checking of the Concessionaire's report and satisfy itself and report to Authority.
g) IE shall continuously monitor and evaluate the KPI's as per the Concession Agreement and recommend to Authority for payment to the Concessionaire based on the performance of the KPI's.

Scope of Services

The scope of services to be provided by the Independent Engineer is detailed hereunder. In addition to the services as detailed hereunder, the IE shall also discharge duties as desired by Authority time to time.

Preparatory Phase

a) On receipt of Draft MIOP from the Concessionaire, the Independent Engineer shall review the submitted documents for any changes, or modifications, if any
b) Shall ensure that the MIOP submitted by the Concessionaire is in compliance with the Scope of Work of the Concessionaire as well as various Project requirements of the Agreement, including those specified in the Concession Agreement, suggest to the Concessionaire for any changes and shall make recommendation to the Authority for approval.
c) The Independent Engineer shall present its review in writing to the Authority and seek its suggestions as well as approval for the proposed modifications in MIOP. Thereafter a joint meeting shall be facilitated with both the concerned Parties to convey the details of the proposed modifications.
d) The IE shall send a notice in this effect to the Parties for the proposed modification. All these activities shall be completed within 15 working days post submission of Draft MIOP by the Concessionaire.
e) The IE shall ensure that the Concessionaire submits the revised MIOP within seven days from the receipt of such notice.

f) Thereafter the Independent Engineer shall review the modified MIOP and/ or supporting documents sent to it by the Concessionaire and notify within 7 (seven) days of receiving such documents to the Authority for final approval

g) The IE shall review and appraise to the Authority and seek approval from the Authority for incorporating changes sought by the Concessionaire to the Approved MIOP. The Authority shall approve the revised MIOP within a period of 7 (seven) days post receipt of revised MIOP.

h) Constantly monitor the progress of MIOP Preparation and other activities and appraise Authority of progress achieved by Concessionaire on the first working day of every week.

Handing Over Phase

The IE would monitor, in accordance with Good Industry Practice and relevant KPIs, the progress during the Procurement of machinery, equipment, vehicles, manpower etc. required for the project along with the phase wise handing over of the zones to the Concessionaire. For this purpose, the Independent Engineer shall undertake, inter alia, the following activities:

a) Shall monitor the progress of project with respect to procurement of project moveable assets and their technical specifications;

b) Shall monitor the deployment of required project staff and manpower for the project operation and ensure reasonable absorption of existing casual/temporary workers of the Authority

c) Shall assist the Authority in issuing of wellness/worthiness certificates for moveable assets for handing over to the Concessionaire.

d) Shall assist the Authority, wherever required in administration of the Concession Agreement in full and in accordance with applicable laws;

e) Shall attend regular meetings ("Project Review Meetings" or "PRMs") with the Authority and the Concessionaire, to be held at least once in every two weeks during the procurement and handover Period to report on progress and quality of work performed by the Concessionaire and to discuss problems or other pertinent matters relating to the work.

f) The IE shall take notes at the meetings and provide a copy of the minutes to each person who attend the meeting.

g) Designate tests on solid waste and/or equipment and if the situation warrants shall instruct the Concessionaire to conduct test in recognized laboratory;

h) Interpret the document requirements and make decisions regarding performance reporting by the Concessionaire for compliance. The IE shall inform and advise the Authority, in a timely manner all matters relating to the implementation and progress of the Works on fortnightly basis;

i) Review, approve or disapprove in consultation with the Authority, plan, report and any other document of the Concessionaire to enforce compliance and conformance with the requirements of Concession Agreement;

j) Whenever considered necessary or advisable to ensure supervision of corrective action to be taken for reformation of defective work, the IE may require inspection or testing of such work, and shall report to the Authority about the compliance or non-compliance;

k) Provide the services of experts to check the quality of materials and the workmanship as per the Approved MIOP

l) Reviews all the activities by Concessionaire and ensure conformity of the same with the Approved MIOP

m) Address issues relating to site specific conditions, design modifications, or Concessionaire disputes.

n) Issue Readiness Certificate/ Provisional Readiness Certificates to the Concessionaire for various activities specified in the Agreement after approval from the Authority;

o) Ensure the Concessionaire has sent necessary notices/pamphlets/posters/advertisement to RWAs/ NGOs/ citizens about the impending handover of the Project Area to the Concessionaire.

p) The IE shall prepare and submit to Authority, Progress Reports including the following:

1. Weekly progress of works;
2. Slippages, if any, in the procurement schedule vis-à-vis planned schedule and the reasons thereof;
3. Schedule for the succeeding week;
4. Issues, if any, with regard to the works along with the details of the action taken for the resolution of the same;
5. Photographic record of progress of works over the previous week.

Concession Period

During this period the Independent Engineer would monitor, in accordance with Good Industry Practice, the Project Operations & Maintenance activities undertaken by the Concessionaire so as to ensure compliance with the O&M Requirements as per the Concession Agreement. The specific activities to be undertaken would include the following:

IE shall be responsible for verification of enumerated data of all the households (done by the Concessionaire) within the Project Area. The IE shall be responsible for preparing formats for data enumeration and get it approved from Authority within 7 working days from COD. The Concessionaire shall collect data related to address, number of members, GPS coordinates, contact number etc. On submission of this data by the Concessionaire, IE shall use this data to evaluate KPIs.

IE shall ensure that the monitoring of Project Operations is done on daily basis as per the Approved MIOP. The IE shall share the daily, weekly, fortnightly and monthly report with the Authority.

The IE shall deploy adequate manpower for monitoring of KPIs on continuous basis; IE shall be responsible for conducting general inspection of the Project Area on daily basis, pay surprise visits as and when situation demands to ascertain conformity with Concessionaire's Project Scope.

The IE shall also appoint one representative from their side, who shall be responsible for tracking daily Project Operations and compiling daily, weekly, fort-nightly and monthly MIS at Control Room

Provide administration of the contract in full and in complete accordance with applicable laws;

Review and approve test results on solid waste, materials, vehicles and/or equipment used;

Interpret the requirements of the Concession Agreement and consult Authority regarding performance of the Concessionaire. The IE shall inform and advise the Authority, in a timely manner all matters relating to the Project Operation and Maintenance;

Review work which fails to comply with the specifications and requirements of the Agreement.

Review, approve or disapprove in consultation with the Authority, plan, report or any other document of the Concessionaire to enforce compliance and conformance with the requirements of the Agreement;

IE shall be responsible for certifying the quantity and quality of waste diversions to Decentralized Processing Facilities

Address issues relating to site specific conditions, C&T Plan modifications, or Concessionaire disputes

Review the SOPs and O&M Manual as per the Schedule 21 from time to time and assist the Concessionaire in finalizing the same. The Independent Engineer shall also consult Authority prior to finalization of the documents; Monitor Operation and Maintenance activities (including maintenance of Project Assets, KPI linked performance, safety and environmental issues) and the overall quality of Project Operation activities so as to ensure compliance by the Concessionaire with the O&M Requirements, O&M Plan and O&M Manual;
As the case may be, IE shall undertake rebasing of IAQ and MQ in accordance with this Concession Agreement
IE shall monitor the deployment of infrastructure and manpower by Concessionaire for Emergency Situations

a. In case of occurrence of Disaster, IE shall facilitate and monitor implementation of Disaster Management Plan as per MIOP
b. IE shall monitor implementation and progress of IEC Plan as per MIOP
c. Undertake a quarterly review of the various records and registers to be maintained by the Concessionaire and suggest suitable remedial measures/ procedures, where necessary.

Meetings, Records and Reporting

The IE shall attend regular meetings ("Project Review Meetings" or "PRMs") with the Authority, and the Concessionaire, to be held at least once in every month during the Concession Period to report on progress and quality of work performed by the Concessionaire and to discuss problems or other pertinent matters relating to the work. The IE shall be solely responsible to provide a copy of the PRM minutes to each person who attended the meeting.

The Independent Engineer shall, in the ordinary course, maintain record of the activities undertaken by it in discharge of its functions and responsibilities. This would include records but not limited to in respect of the following:

a) Manpower deployed and other organizational arrangements of the Independent Engineer;
b) Review Report of documents submitted to it by the Concessionaire
c) Inspections undertaken, and notices/ instructions issued to the Concessionaire;
d) Review of compliance with Project Requirements and O&M Requirements;
e) Concessionaire's Payments
f) Change in Law;
g) Force Majeure Events;
h) Breaches and defaults by the Parties; and
i) Handback Requirements

The Independent Engineer would be required to submit the following reports to the Client / GCC Parties:

a) MIOP Completion Report
b) Financial Closure Report
c) Asset Procurement Report
d) Employee Report
e) Asset Registry Report
f) Monthly Progress Report (MPR)
g) Tariff Rebasing Report
h) Report on Payment for Unexpected Increase in Quantity
i) Accident Report
j) DHW Disposal Report
k) Weekly Complaint Redressal Report
l) Service Addition or Deletion Report
m) Waste Quantity Report to Decentralized Units and Disposal Facility/ dump site
n) Insurance Report
o) Legal Encumbrance Report
p) EHS Compliance Report
q) Daily Project Asset Availability Report
r) IEC Report
s) Contract Administration/ Deviation Report
t) Daily, Weekly, Monthly and Quarterly Performance Report

Capacity Building

Organizing Workshops and Seminars for capacity building of Client and other stakeholders at their own risk and cost. At least one in every six months during the entire tenure of IE

Payment Terms for IE:

The payment for IE shall be made 50% by the Authority and 50% by the Concessionaire. The first payment of 50% will be fixed payment and 50% payment shall be made to the IE on approval of Performance based payment of the Concessionaire based on the evaluation of KPI's.

11 Schedule 12: Guideline for IEC Activities

This Schedule shall be referred as a guidance for creating awareness amongst the citizens of the Project Area about the need of keeping their city clean by following SWM Rules 2016 and other applicable laws/byelaws/statute/court directives/directives by competent authorities.

The Parties agrees that the community participation is important to:

a) Achieve the principles of reducing, reusing, and recycling waste.

b) Discouraging littering of waste on streets and into drains, open spaces, water bodies etc.

c) Promoting segregation of waste at source where the waste shall be segregated as biodegradable, non-bio-degradable and domestic hazardous waste.

d) Achieve increased level of awareness about the efficient methods of waste management among the public through involvement of RWAs, or NGOs.

1.1 Agency for Carrying out IEC Activity

The concessionaire shall carry out the IEC activity or alternatively may hire appropriate agency having proven credentials in IEC activity. The hired agency by the concessionaire may be NGO, Trust, Community Based Organizations (CBO) or Body Corporate. In case the concessionaire hires agency other than itself then that agency must possess at least following credentials in activities:

a) Design and Implementation of household surveys, assessment and reporting

b) Community awareness building for behaviour change and Information Education Communication (IEC) Programs related to solid waste management, sanitation, health and hygiene, economic and social well-being of rag pickers, sanitary workers, vulnerable groups etc. livelihood, composting etc.

c) Capacity Building of local groups on livelihood, social safeguard, sanitation, health and environment impact due to improper disposal and handling of solid waste.

d) The agency shall impart project specific training to them prior to deployment. Whenever services of the hired agency staff are found /noticed unsatisfactory by Authority they shall be removed/terminated by the concessionaire immediately as per direction of Competent Authority.

1.2 Outline

a) *Awareness Generation:*

The following objective would be attained through production of IEC materials and its usages at different level:

i. Create awareness among the community, and prepare residents for upcoming project, inform about SWM Rules 2016/byelaws, source segregation, health and environment impacts, roles of Authority & Concessionaire in the project, etc. through web site, mass media communication strategies such as newspapers releases, hoardings, glow sign boards, radio, TV, street plays, etc. with the approval from concerned departments if any.

ii. Design IECs best suitable to reinforce the messages given by agencies involved in implementation of PPP SWM in other cities or other local initiatives at Authority level.

b) *Door to Door Waste Collection*

i. Establish a working and sustainable model at the ward level to develop habit amongst residents for storing wet, dry, domestic hazardous waste separately and handing over the segregated waste to the waste collector.

ii. In case in the area where provisioning of community bin has been made, awareness shall be generated for disposing waste in segregated fashion;

iii. Facilitate awareness amongst beneficiaries about paying for improved service standard and motivating beneficiaries for payment.

iv. Undertake programme in a phased manner to ensure community participation in waste segregation. For this purpose, regular meetings shall be arranged by the concessionaire in consultation with ward level authority, with representatives of local resident welfare associations, local groups etc.

c) Social Safeguard of Sanitary WorkersTraining of sanitary workers for improved health and economic status of sanitary workers through regular use of personal protective equipment (PPE)/ protective gears.

d) Income Generation through Waste: Training and handholding of informal waste pickers to be active members of private operators for door-to-door collection of segregated waste and its disposal at identified locations.

e) Target Groups:

The Concessionaire is expected to network, coordinate and consult with the following target groups and beneficiaries:

i. Mayor and Deputy Mayor
ii. Authorities for promoting Zonal level Program and support consultations)
iii. Authority officials
iv. All ward councillors in Program ward/Officials of the Authority
v. Education Department
vi. Health Department
vii. Pollution Control Department
viii. Officials of leading newspapers within city
ix. Senior citizen forum, clubs, local samities, or any other influential groups
x. Colleges, and institutes, National Social Service (NSS), National Cadet Corps (NCC), Scouts and Guide, Eco-clubs in schools, etc.
xi. Men, women, and children in wards including poverty pockets
xii. Local samities or groups (newly formed within the Program or existing)

xiii. School Principals, Teachers, and Children in wards

xiv. Hotel Association

xv. Identified Informal waste pickers.

xvi. Formal and informal waste traders

xvii. servants (male and female)

xviii. Sanitary workers, security persons placed at sanitary land filled sites, related persons

xix. Any others, as per need and requirements

f) *Suggested Approach*

The Concessionaire can facilitate discussions amongst residents and local groups through brochures, pamphlets, and any other appropriate methods to disseminate identified information to individuals. The following are some of the proposed approach and methodologies for awareness generation but not limited to. The Concessionaire is expected to explore the suggested approach best suitable to local needs and requirements. Other local innovations and related initiatives for the betterment of the project may be accepted by the Authority.

g) Baseline Survey/data collection

Conduct baseline survey to assess the socio-economic status of target groups, willingness to segregate. formal and informal traders involved in collection of plastic and other waste.

h) Stakeholders Analysis

Description: Any intervention will affect stakeholders differently; some of the stakeholders can influence the decision-making process. It is important therefore to identify stakeholders who might have a negative impact (such as informal waste pickers) and those who can influence the decision-making process (such as business owners and neighbours of project area. Concessionaire need to consider the proposed list of stakeholders and related categories for doing the stakeholder analysis.

i) Stakeholders Consultation

Description: Organise formal or informal process of consultation with resident in city locations or through door-to-door initiatives. The main objective is to establish meaningful interaction between municipal officers, citizens, and other stakeholders and to obtain consensus on a concrete plan of action. Representative groups shall be consulted to ascertain their perceptions of the SWM services, their expectations, willingness to support and participate in the SWM program and willingness to pay for the services, the mode of payment, and the periodicity of payment.

j) Community Organization

Description: Identify Swachta-Samities/RWAs that are taking some initiatives at the local level with limited technical skills and resources. The NGO can reorganize the group, and do the required capacity building and utilise their resources in initiating door to door solid waste collection with support from sanitary workers not employed by Authority or working on contract, informal waste

pickers etc. In the absence of existing groups it is expected to form new such groups. These groups can be named as 'SWACHH Group' in each ward or for other Authorities as well.

The group formed at the zonal/unit/ward level as the case may be will be ultimately responsible to ensure door to door solid waste collection, source segregation, payment for the services, maintenance of the dustbins, etc.

k) *Awareness activities*

1) Implement campaign within educational institutions especially regarding source segregation, health and environment impact. Organise regular meetings with principals, teachers, and students to explain the need for change and the usefulness to society of new ways to manage waste. The message can be reinforced by holding essay, debate, or drawing and painting competitions on the subject and publicizing the winning contestants.
2) Prepare hoardings/glow sign boards and do wall writing with approval of Authority at prominent locations on source segregation and health and environment impact. In addition, other mass media communication strategy can be used for community awareness on identified topics at large such as, TV and radio audio and visual spots.
3) Organise regular street plays for awareness about waste management and motivate nonparticipating residents. The main objectives of this tool of communication will be to
4) Attract residents to participate in the on-going SWM program Emphasize the importance of segregation and disposal of household solid waste and in keeping streets clean
5) Drive home the importance of solid waste reduction and waste recycling and discourage use of plastics in daily life.

l) *Door to Door segregated Solid waste Collection:*

1) The Concessionaire shall conduct door-to-door waste collection in all wards in a phased manner as per MIOP. The following activities are proposed for implementation with support from Authority:
2) Identifying wards, colonies, or areas where there is no proper mechanism of street sweeping and door-to-door solid waste collection, where the Authority has future plans to initiate door-to-door collection of household waste; or where any local groups have taken initiatives using their own resources. The areas identified will be finalized in consultation with the officials from Authority
3) Facilitate developing working model for segregated storage of household waste in separate containers/bins only. This is essential to develop habits for disposing household waste at the appropriate place. It is important to collect waste in segregated form. But depending upon the situation of the city and mind set of residents, developing proper disposal habits and paying for the facility is more important.
4) Concessionaire shall ensure proper disposal of collected waste from the bins located on identified locations in the market
5) Supervise a waste collection team with support from SWACHH Group. This waste collection team and supervisor of concessionaire will be expected to review whether waste is segregated

at source or not with support from agency. The supervisor needs to request HH to give waste in segregated form only as much as possible.

6) The waste collection team and IE representative at field level shall compile daily information on source segregation in a prescribed format. This will help to assess the trend whether waste is segregated at source or not.
7) Concessionaire shall be expected to make provision for giving award to HHs, hotel and market associations etc. for giving segregated waste and payment of user's charges on a regular basis.
8) Create a helpline and a mechanism for receiving public complaints and addressing them quickly.
9) A monthly review shall be carried out by way of forming a small working groups represented by Authority's officials, Concessionaire and ward councillors and the group shall record the activities on quarterly basis.

m) *Social safeguard of waste collector and sanitary workers:*

1) Ensure capacity building of rag pickers, sanitary workers, vehicle drivers, guards/security person for use of protective gear, health and environment impact due to improper handling and disposal of solid waste.

2) Promote use of protective gears amongst sanitary workers engaged SWM Service, and make them about health and economic impact.

3) Monitor and document use of protective gears amongst sanitary workers and rag pickers as per identified PPE (personal protective equipment) safeguard checklist. Plan motivational campaigns for its regular use as per need.

n) *Capacity building of local groups*

1) Organise training program for SWACHH group, and RWAs to motivate the community toward waste management is important for ensuring the sustainability of a system. All stakeholders need to be oriented toward segregation at source and to understand the problems and health issues concerned with inefficient disposal of municipal solid waste.

2) Rag pickers and itinerant waste retrievers shall preferably be involved for door to door collection of source-segregated waste. Rag pickers need to be educated on the ill effects of abusing alcohol and drugs, rummaging through solid waste piles without safety gear, contracting infections through unsafe handling of waste, and so forth.

3) Training in the right method of segregation and collection of waste shall be given. They should also be taught to manage their time and to follow the route plan for each sector. They should be taught soft skills to interact with residents and to promote congenial working relations with their partners.

4) Target groups shall domestic maids, hotel/restaurant workers, RWA's.

1.3 Authority's Obligation

Authority shall:

a) Support to Concessionaire in coordinating and networking at zonal level departments and agencies if required regarding follow-up of pending issues, and handling of grievances

b) Facilitate in identifying the gaps in implementation of awareness activities at field level.

c) Monitoring, supervision, and review of Concessionaire's activities on a monthly basis.

d) Shall make Newspaper advertisement for Total Area Cleaning during the Project Area takeover by the Concessionaire related *"Please remove all old vehicle / scrap of any type / wooden items / stones / frames or structures for commercial purpose from the street or Infront of their house/ establishment. If not removed the concessionaire shall remove those and deposit it at the waste dumping ground at Kodungaiyur".*

e) Shall provide weekly news paper advertisement about the mobile App, complaint redressal, scope of service and any other information relevant for the successful implementation & operation of the project. It is further clarified that the advertisement shall be weekly once during first three months and once the project is stabilized & all IT infrastructures are fully functional the advertisement shall be monthly once.

1.4 Monitoring and Reporting Requirements

The Concessionaire is expected to conduct the internal monitoring of the activities to assess their effectiveness in field. The IE will provide the basic monitoring indicators.

In addition to this, regular monitoring of the IEC activities may be done by Authority through regular field visits as well as monthly and quarterly review meetings at zone and ward level.

In-charge of IEC activities of Concessionaire shall review reports and documents submitted and prepare feedback and comments to improve the quality.

IE shall submit a quarterly report on performance of Concessionaire's IEC activities.

1.5 Reporting System

The Concessionaire will implement activities described above in accordance with the approved work plan during the Concession period as approved in the MIOP. The Concessionaire shall maintain daily records of the progress with regard to the works carried out. These will form the basis of periodic reports and returns as may be required by the IE. The reports to be submitted to Authority by Concessionaire are as under:

Reports and Returns for IEC activities

S.no	Deliverables	Number of Copies	Duration	Topic
1	Action Plan	2	During MIOP submission	Schedule of activities
2	Monthly Progress Reports	2	Tenth day of each month	Brief summary of activities taken up, progress achieved and problem

S.no	Deliverables	Number of Copies	Duration	Topic
				encountered during the preceding month
3	Quarterly Progress reports	2	Two weeks after completion of the quarter	Reports which provide detailed assessments of the progress achieved, problems encountered and results of program taken up
4	Community level training reports	2	Within ten days after the completion of each training program	Topics, objectives, brief details of various sessions, copy of presentations, outcomes, suggestions, analysis, feedback, participants registration list and photographs
5	Baseline and Annual Reports including all data related to IEC and SWACHH group	2	Ten days after achieving COD and subsequently Annually.	Survey finding, census data- Annually once.
6	Documents inclusive of IEC materials	Two hard and soft copies	One month prior to the completion of assignment	All documents/materials produced during assignment period

Above reports shall be submitted to Authority after its verification and approval from Concessionaire. The verification of all above report shall be carried out by concerned in-charge from Concessionaire.

1.6 Action Plan for Awareness Generation on SWM

During the Implementation Period and Concession Period, some new activities may be added as per the identified requirements. The Concessionaire shall prepare a detailed action plan for carrying out the following activities for awareness generation which shall be part of the approved MIOP.

Proposed IEC Action Plan for Solid Waste Management Activates

S.no	Activity /Issues	Indicators
Awareness Generation		
1.1	Baseline survey within the project area	Data on No.of HH/ commercial establishments, rag pickers etc. Socio economic status, health problems faced by sanitary workers, perception about the protective gears, status of health benefits
1.2	Public Consultations	With various stakeholders in each lanes of the ward across Project Area. (formal)
1.3	Formation of SWACH Group	With various stakeholders in each lanes of the wards across the towns. RWA's and other large housing infrastructure
1.4	SWM school campaign	Identify number of secondary government and private schools interested to participate for information dissemination at home and peer group.

S.no	Activity /Issues	Indicators
1.5	Awareness through mass media	Display of hoardings/glow sign boards on source segregation and health and environment impact
		Transmission of awareness messages/audio visual spots through popular channels, FM on source segregation and health and environment impact
1.6	Street Plays	Street plays on prime hot spots, during local level training, rallies, competitions, public consultations etc
Door to Door Solid waste collection, domestic hazardous waste, waste storage at secondary storage points and handling of grievances		
2.1	Door to Door Solid waste Collection	Door to door collection of segregated waste, separate storage of DHW, collection and deposition at collection centres. Gradual increase in source segregation. Disposal of segregated waste at secondary collection points. Creation of helpline for grievance handing
Social Safeguard for sanitary workers		
3.1	Use of protective gears during handling of solid waste	Enhanced awareness and active participation
3.2	Health Insurance	Enhanced awareness and active participation
3.3	Enumeration of Ragpickers	Ragpickers data base.
Capacity building of Local Groups		
4.1	Orient Sanitary workers on use of PPP and health concerns, good behavior, practices and right methods of segregation and collection of waste.	Enhanced awareness and increased health benefits
4.2	Orient sanitary workers and rag pickers on various welfare schemes related to education, health, employment etc	Increased awareness and improved well being

12 Schedule 13: Guidelines for Social Safeguard

This schedule shall be referred as the Guideline for the Concessionaire where the Concessionaire shall provide the social guards as per the Good Industry Practice. The broad guideline is appended as follows:

12.1 Avoidance of Interference :

The Concessionaire shall not interfere unnecessarily or improperly with the access to and use and occupation of all roads, footpaths and any other property in the Project Area

The Concessionaire shall indemnify and hold the Authority harmless against and from all damages, losses and expenses (including legal fees and expenses) resulting from any such unnecessary or improper interference.

12.2 Handling and Management of solid waste

a) Organize house-to-house collection of waste or through bin collection as the case may be on regular pre-informed timings and schedule by using bell ringing of musical vehicle (without exceeding permissible noise levels);

b) Ensure that, waste (solid waste, dry leaves) are not burnt;

c) Ensure that stray animals do not move around waste bins. Such bins shall be provided with heavy lid.

d) Ensure to remove all solid waste deposited in bins on a daily basis and transfer it to disposal site wherever applicable, so that there is no nuisance/ odour problem in any locality due to waste bins/waste transfer points

e) Concessionaire shall ensure providing adequate protective gears including hand gloves, face mask and gum boots to all sanitary workers engaged in collection and handling of solid waste.

12.3 Secondary Collection of Waste

a) A storage facility shall be so placed that it is accessible to users;

b) Wastes stored are not exposed to open atmosphere and shall be aesthetically acceptable and user-friendly;

c) Concessionaire shall ensure that no bins or containers, wherever placed, shall overflow with the waste at any point of time.

d) Bins for storage of bio-degradable wastes shall be painted green, those for storage of recyclable wastes shall be painted white/blue and those for storage of other wastes shall be painted black;

e) Concessionaire shall train their sanitary workers for safe handling of waste. If unavoidable due to constraints, manual handling shall be carried out under proper precaution with due care for safety of workers by regular use of required protective gears.

12.4 Transportation of Solid waste

a) Vehicles used for transportation of waste shall be covered so that the waste is not visible to public, nor exposed to open environment preventing their scattering during transportation.

b) Concessionaire shall ensure that the vehicles engaged in waste transportation follow the permissible speed limits and other road safety norms.

12.5 Engagement of staff and labor

Concessionaire shall make arrangements for the engagement of all staff and labor, local or otherwise, and for their payment and extending other facility in compliance to the Applicable Law. The

Concessionaire shall be encouraged, to the extent practicable and reasonable, to employ staff and labor with appropriate qualifications and experience from places not limited to but near to geography.

12.6 Rates of Wages and Conditions of Labor

a) The Concessionaire shall pay rates of wages and observe conditions which are not lower than the minimum wage as adopted by Greater Chennai Corporation from time to time

b) The Concessionaire shall inform their personnel about their liability to pay personal income taxes in respect of such of their salaries, wages, allowances, and any benefits as are subject to taxes under the laws of the Bharat for the time being in force, and the Concessionaire shall perform such duties in regard to such deductions thereof as may be imposed on him by such Laws.

12.7 Persons in the Service of the Authority

The Concessionaire may recruit or absorb temporary sanitary workers from the Project Area to maximum possible extent according to their existing company recruitment policy.

12.8 Labor Laws

a) The Concessionaire shall comply with all the relevant Labor Laws applicable to the Contractor's Personnel, including Laws relating to their employment, health, safety, welfare, immigration and emigration, and shall allow them all their legal rights.

b) The Concessionaire shall require his employees to obey all applicable Laws, including those concerning safety at work and shall do needful for the compliance.

c) Concessionaire shall follow and implement all statutory provisions on labor (including not employing or using children as labor and equal pay for equal work), health, safety, welfare, sanitation and working conditions. The Concessionaire shall base the employment relationship upon equal opportunity and fair treatment and shall not discriminate with respect to aspects of the employment relationship, including recruitment and hiring, compensation (including wages and benefits), working conditions and terms of employment or retirement, and discipline. The Concessionaire shall provide equal wages and benefits to men and women for the work of equal value or type.

12.9 Working Hours

a) All shift workers shall report for the duty on or before the specified time as per approved in the MIOP;

b) The workers shall not be made to work outside the normal working hours stated in the employment terms & condition (appointment letter), unless Otherwise stated;

i. The Independent Engineer gives consent, or

ii. The work is unavoidable, or necessary for the protection of life or property or for the safety of all, in which case the Concessionaire shall immediately inform IE and seek consent.

12.10 Facilities for Staff and Labor

The Concessionaire shall provide welfare facilities for the Personnel. The Concessionaire shall not permit any of the Concessionaire Personnel to maintain any temporary or permanent living inside the premises of project assets area.

12.11 Medical and Accidental Facilities

a) The Concessionaire shall at all times take all reasonable precautions to maintain the health and safety of the employed personnel. In collaboration with local health authorities, the Concessionaire

shall ensure that medical staff, first aid facilities and ambulance service are available at the project area.

b) The Concessionaire shall appoint EHS officers, responsible for maintaining safety and protection against accidents. This person shall be qualified for this responsibility and shall have the authority to issue instructions and take protective measures to prevent accidents. Throughout the concession period, the Concessionaire shall provide whatever is required by this person to exercise this responsibility and authority.

c) The Concessionaire shall send to IE, details of any accident as soon as practicable after its occurrence. The Concessionaire shall maintain records and make reports concerning health, safety and welfare of persons involved & affected, and damage to property if any, as IE may reasonably require.

d) The Concessionaire shall be responsible for the safety of employees and the concessionaire shall be liable for payment of necessary compensation in the case of accidents as per Workers Compensation Act.

e) It shall be the Concessionaire's sole responsibility to protect the public and its employees against the accident from any cause and the concessionaires shall indemnify the Authority against any claims for damages for injury to person or property, resulting from any such accidents and the Concessionaire shall, where the provisions of the Workmen's Compensation Act apply, take steps to properly insure against any claims thereafter.

f) When an accident occurs at any municipal solid waste collection, segregation, storage, processing, treatment and disposal facility or landfill site or during the transportation of such waste, which results in the death of any of the workmen employed by the Concessionaire which is so serious as to be likely to result in the death of any such workmen, the Concessionaire shall within 24 hours of the happening of such accidents, intimate the Authority in writing, the fact of such accident. The Concessionaire shall indemnify Authority against all loss or damage sustained which resulted due to directly or indirectly Concessionaire's negligence. In case penalties or fines if any payable by the concessionaire to Government or to any competent authority as a consequence of concessionaire's failure the concessionaire shall pay to those quantum of penalty or fine.

g) In the event of an accident in respect of which compensation may be payable under the Workmen's Compensation Act VIII of 1923 by the Concessionaire, the Authority as principal shall lawfully to retain out of moneys due and payable to the competent authority from the payment due to the Concessionaire and pay to the competent authority or to the claimant who's claim has legal sanctity. It is further clarified that (i) if any court directive is issued for payment, then Authority shall deduct money from the payment due to the concessioner and pay to the claimant as per the court order; or (ii) if any order is issued by the competent authority for payment, then Authority shall deduct money from the payment due to the concessioner and pay to the claimant as per the court order; further to this the Authority shall take legal opinion before making any deduction as the Concessionaire may go for the appeal, challenging those orders for payment.

h) The Concessionaire shall provide and maintain upon the Project Facilities sufficient, proper and efficient first-aid equipment to the approval of the IE and in accordance with the requirements of

ILO Convention No.62. The appliances and equipment shall be available for use at all times during the Concession Period.

12.12 Supply of Drinking Water and Sanitation

The Concessionaire shall in all reasonability, having regard to local conditions, provide at his expense an adequate supply of drinking water for the use of employees, together with sanitary facilities (hygienic toilets at mustering point/ attendance locations), to the satisfaction of the IE.

12.13 Measures against Insects and Pest Nuisance

The Concessionaire shall comply with all the regulations of the local health authorities, including use of appropriate insecticide/ vaccination / basic medicine.

12.14 Prohibition of Alcoholic Liquor and Drugs

The Concessionaire shall not import, sell, give barter or otherwise dispose of any alcoholic liquor or drugs, or permit or allow importation, sale, gift barter or disposal thereto by Concessionaire's Personnel.

12.15 Festivals and Religious Customs

The Concessionaire shall respect the Country's recognized festivals, days of rest and religion or other customs.

12.16 Funeral Arrangements

The Concessionaire shall be responsible, to the extent required by local regulations, for making any funeral arrangements for any of it's local employees who may die while discharging her/ his duty hours. It is further clarified that on duty shall mean that the employee has made his attendance and the expiration of duty hours has not been attained.

12.17 Prohibition of Forced or Compulsory Labor

The Concessionaire shall not employ "forced or compulsory labor" in any form. "Forced or compulsory labor" consists of all work or service, not voluntarily performed, that is extracted from an individual under threat of force or penalty.

12.18 Prohibition of Child Labor

The Concessionaire shall not employ any child to perform any work, including work that is economically exploitative, or is likely to be hazardous to, or to interfere with, the child's education, or to be harmful to the child's health or physical, mental, moral, or social development. "Child" means a child below the statutory minimum age specified under applicable National, provincial or local law.

12.19 Employment Records of Workers

The Concessionaire shall keep complete and accurate records of all the field personnel's employed for the Project. The records shall include the names, ages, genders, designation, hours worked (for worker's) and wages/ compensation paid. These records shall be summarized on a monthly basis and shall be available for inspection by the IE during normal working hours. It is further clarified that it shall be the concessionaire's discretion to reveal the compensation of it's officers & management staff's.

12.20 Workers Organizations

Concessionaire shall enable alternative means for the Concessionaire's Personnel to express their grievances and protect their rights regarding working conditions and terms of employment. Concessionaire shall not discourage the Concessionaire's Personnel from forming or joining workers' organizations of their choosing or from bargaining collectively and shall not discriminate or retaliate against the Concessionaire's Personnel who participate, or seek to participate, in such organizations and bargain collectively. The Concessionaire shall engage with such workers' representatives. Workers' organizations are expected to fairly represent the workers in the workforce.

12.21 Non-Discrimination and Equal Opportunity

The Concessionaire shall not make employment decisions on the basis of personal characteristics unrelated to inherent job requirements. The Concessionaire shall base the employment relationship on the principle of equal opportunity and fair treatment and shall not discriminate with respect to aspects of the employment relationship, including recruitment and hiring, compensation (including wages and benefits), working conditions and terms of employment, access to training, promotion, termination of employment or retirement, and discipline. Special measures of protection or assistance to remedy past discrimination or selection for a particular job based on the inherent requirements of the job shall not be deemed discrimination.

12.22 Insurance for Concessionaire's Personnel

The Concessionaire shall affect and maintain insurance against liability for claims, damages, losses and expenses (including legal fees and expenses) arising from injury, sickness, disease or death of any person employed by the Concessionaire or any other of the Concessionaire's Personnel. The insurance shall cover the concessionaire against liability for claims, damages, losses and expenses (including legal fees and expenses) arising from injury, Sickness, disease or death of any person employed by the Concessionaire or any other of the Concessionaire's Personnel, except that this insurance may exclude losses and claims to the extent that they arise from any act or neglect. The insurance shall be maintained in full force and effect during the whole time that these personnel are working in the project operation.

For a Subcontractor's employees (who are engaged during Project Facility construction & maintenance, vendors and any such personnel not employee but are working at the concessionaire's premise), the insurance may be affected by the Subcontractor, but the Concessionaire shall be responsible for compliance with this sub Article.

In addition to any other insurance required to be taken out by statutory requirements (e.g. Workmen's Compensation Act 1923), the Concessionaire shall take out an Accident Insurance in favour of each workman employed. Provided that, in respect of any persons employed by any Sub- Contractor, the Concessionaire's obligations to insure as aforesaid under this sub Article shall be satisfied if the Sub-Contractor shall have taken out Accident Insurance in respect of Concessionaire's workmen employed on the works and the Concessionaire shall require such Sub-Contractor to produce to the Concessionaire, when required, such policy of Accident Insurance and the receipt for the payment of the current premium paid.

13 Schedule 14: Minimum Infrastructure Requirements for First Year

The Concessionaire shall deploy following Minimum Infrastructure in first year of the project.

S.no	Type	Zone-5	Zone-6	Total
1	Battery Operated Vehicles for Primary collection	655	651	**1306**
2	Mechanical Sweepers	2	2	**04**
3	Refuse Compactors (8 cum)	22	17	**39**
4	Refuse Compactors (14 cum)	6	4	**10**
5	Refuse Compactor Bins (1100 litres capacity)	1269	1017	**2286**
6	Street Sweeping Bins (120 litres)	589	915	**1504**
7	Bin Washers	3	3	**6**
8	Horticultural Waste removal vehicle	1	1	**2**
9	Backhoe Loaders	1	1	**2**
10	Litter Bins for Bus Route Roads	816	220	**1036**
11	Skid Steer Loaders	3	3	**6**
12	Battery Operated Vehicles for Litter Free Corridor/Area	22	17	**39**
13	Static Compactors	4	2	**6**
14	HMV for Hot spot	1	1	**2**
15	LMV for carcass waste	1	1	**2**
16	LMV for Hotspot & other services	18	9	**27**
17	LMV for Domestic Hazardous Waste	1	1	**2**

S.no	Type	Zone-5	Zone-6	Total
18	LMV for TNUHDB Area Cleaning activity	2	3	**5**
19	LMV for Horticultural Waste	1	1	**2**
20	LMV for Priority Services	3	2	**5**
21	MUV for TNUHDB Area Cleaning Activity	2	1	**3**

Note:

1) The above infrastructure numbers are including backup of 10%.(Only for BoV & Refuse Compactors- 8 cum & 14 cum)
2) The above infrastructure requirement is minimum for the Project in the first year, however the concessionaire may deploy more infrastructure for meeting the KPI;
3) It is further clarified that as the takeover of the Project Area shall be progressive, so the deployment of Infrastructure shall be also progressive and the full deployment shall be achieved on CoD.
4) Refuse compactor capacity may be swapped with the static compactor capacity and accordingly the manpower deployment shall be adjusted / swapped but in no case the cumulative minimum manpower deployment shall go below the cumulative Minimum Manpower Requirement.
5) Deployment of more mechanical sweeper shall not lead to reduction in sweeping manpower.
6) The concessionaire shall have option to change the capacity of litter bins, but the minimum cumulative litter bin capacity shall not change.
7) In case the land for the static compactor is not being provided by the Authority or delayed due to situation beyond the control of the Parties then the Concessionaire shall have option to operate the project with Refuse Compactors till such time the land is made available. The CoD of the project shall not be withheld.
8) The Concessionaire shall have flexibility to deploy different composition of Refuse Compactor/Static Compactor vehicles subject to the condition that the overall carrying capacity as indicated in row nos. 3,4 & 13 in the above table shall be complied with.
9) Capacities and specifications of the infrastructure to be deployed the shall be equal to or on the higher than specifications mentioned in Schedule 25.

14 Schedule 15: Minimum New Infrastructure Requirements form year 2 to year 10

The Concessionaire shall procure and deploy additional infrastructure required Year on Year to cater the increase in population and waste quantum which is also including backup (only for BoV). It is further clarified that these infrastructures shall be "in addition" to the infrastructure indicated in schedule-14[11].

Zone-5										
S.no	**Type**	**Year 2**	**Year 3**	**Year 4**	**Year 5**	**Year 6**	**Year 7**	**Year 8**	**Year 9**	**Year 10**
1	Battery Operated Vehicles for Primary collection	17	16	18	19	20	16	23	20	21
2	Mechanical Sweepers	Nil	Nil	Nil	Nil	Nil	Nil	Nil	Nil	Nil
3	Refuse Compactors (8 cum)	Nil	Nil	Nil	1	Nil	Nil	1	Nil	1
4	Refuse Compactors (14 cum)	Nil	Nil	Nil	Nil	Nil	Nil	Nil	Nil	Nil
5	Refuse Compactor Bins (1100 litres capacity)	120	317	317	323	329	224	228	116	118
6	Street Sweeping Bins (120 litres)	Nil	Nil	Nil	Nil	Nil	Nil	Nil	Nil	Nil
7	Bin Washers	Nil	Nil	Nil	Nil	Nil	Nil	Nil	Nil	Nil

[11] Example: Incase in the first year 100 BOV has been deployed then in year 2 the requirement is 15 for additional infrastructure, then total number of BoV to be deployed shall be 115 like-wise for all other infrastructure categories.

Zone-5										
S.no	**Type**	**Year 2**	**Year 3**	**Year 4**	**Year 5**	**Year 6**	**Year 7**	**Year 8**	**Year 9**	**Year 10**
8	Horticultural Waste removal vehicle	Nil	Nil	Nil	Nil	Nil	Nil	Nil	Nil	Nil
9	Backhoe Loaders	Nil	Nil	Nil	Nil	Nil	Nil	Nil	Nil	Nil
10	Litter Bins for Buse Route Roads	Nil	Nil	Nil	Nil	Nil	Nil	Nil	Nil	Nil
11	Skid Steer Loaders	Nil	Nil	Nil	Nil	Nil	Nil	Nil	Nil	Nil
12	Battery Operated Vehicles for Litter Free Corridor/Area	Nil	Nil	Nil	Nil	Nil	Nil	Nil	Nil	Nil
13	Static Compactors	Nil	Nil	Nil	Nil	Nil	Nil	Nil	Nil	Nil
14	HMV for Hot spot	Nil	Nil	Nil	Nil	Nil	Nil	Nil	Nil	Nil
15	LMV for carcass waste	Nil	Nil	Nil	Nil	Nil	Nil	Nil	Nil	Nil
16	LMV for Hotspot & other services	Nil	Nil	Nil	Nil	Nil	Nil	Nil	Nil	Nil
17	LMV for Domestic Hazardous Waste	Nil	Nil	Nil	Nil	Nil	Nil	Nil	Nil	Nil
18	LMV for TNUHDB Area Cleaning activity	Nil	Nil	Nil	Nil	Nil	Nil	Nil	Nil	Nil

Zone-5										
S.no	**Type**	**Year 2**	**Year 3**	**Year 4**	**Year 5**	**Year 6**	**Year 7**	**Year 8**	**Year 9**	**Year 10**
19	LMV for Horticultural Waste	Nil	Nil	Nil	Nil	Nil	Nil	Nil	Nil	Nil
20	LMV for Priority Services	Nil	Nil	Nil	Nil	Nil	Nil	Nil	Nil	Nil
21	MUV for TNUHDB Area Cleaning Activity	Nil	Nil	Nil	Nil	Nil	Nil	Nil	Nil	Nil

Zone-6										
S.no	**Type**	**Year 2**	**Year 3**	**Year 4**	**Year 5**	**Year 6**	**Year 7**	**Year 8**	**Year 9**	**Year 10**
1	Battery Operated Vehicles for Primary collection	16	19	20	19	16	19	21	20	18
2	Mechanical Sweepers	Nil	Nil	Nil	Nil	Nil	Nil	Nil	Nil	Nil
3	Refuse Compactors (8 cum)	Nil	Nil	2	Nil	Nil	Nil	Nil	1	1
4	Refuse Compactors (14 cum)	Nil	Nil	Nil	Nil	Nil	Nil	Nil	Nil	Nil
5	Refuse Compactor Bins (1100 litres capacity)	20	254	259	265	269	183	187	95	97

Zone-6										
S.no	**Type**	**Year 2**	**Year 3**	**Year 4**	**Year 5**	**Year 6**	**Year 7**	**Year 8**	**Year 9**	**Year 10**
6	Street Sweeping Bins (120 litres)	Nil	Nil	Nil	Nil	Nil	Nil	Nil	Nil	Nil
7	Bin Washers	Nil	Nil	Nil	Nil	Nil	Nil	Nil	Nil	Nil
8	Horticultural Waste removal vehicle	Nil	Nil	Nil	Nil	Nil	Nil	Nil	Nil	Nil
9	Backhoe Loaders	Nil	Nil	Nil	Nil	Nil	Nil	Nil	Nil	Nil
10	Litter Bins for Bus Route Roads	Nil	Nil	Nil	Nil	Nil	Nil	Nil	Nil	Nil
11	Skid Steer Loaders	Nil	Nil	Nil	Nil	Nil	Nil	Nil	Nil	Nil
12	Battery Operated Vehicles for Litter Free Corridor/Area	Nil	Nil	Nil	Nil	Nil	Nil	Nil	Nil	Nil
13	Static Compactors	Nil	Nil	Nil	Nil	Nil	Nil	Nil	Nil	Nil
14	HMV for Hot spot	Nil	Nil	Nil	Nil	Nil	Nil	Nil	Nil	Nil
15	LMV for carcass waste	Nil	Nil	Nil	Nil	Nil	Nil	Nil	Nil	Nil
16	LMV for Hotspot & other services	Nil	Nil	Nil	Nil	Nil	Nil	Nil	Nil	Nil

Zone-6										
S.no	**Type**	**Year 2**	**Year 3**	**Year 4**	**Year 5**	**Year 6**	**Year 7**	**Year 8**	**Year 9**	**Year 10**
17	LMV for Domestic Hazardous Waste	Nil	Nil	Nil	Nil	Nil	Nil	Nil	Nil	Nil
18	LMV for TNUHDB Area Cleaning activity	Nil	Nil	Nil	Nil	Nil	Nil	Nil	Nil	Nil
19	LMV for Horticultural Waste	Nil	Nil	Nil	Nil	Nil	Nil	Nil	Nil	Nil
20	LMV for Priority Services	Nil	Nil	Nil	Nil	Nil	Nil	Nil	Nil	Nil
21	MUV for TNUHDB Area Cleaning Activity	Nil	Nil	Nil	Nil	Nil	Nil	Nil	Nil	Nil

Note:

1) The above infrastructure requirement is minimum for the Project; however the concessionaire may deploy more infrastructure for meeting the KPI;
2) The concessionaire shall have option to change the capacity (size) of litter bins, but the minimum cumulative litter bin capacity shall not change also, neither the Refuse Compactor bin capacity shall be swapped with the Litter Bin Capacity.
3) The replacement of Refuse Compactor Bins, Litter Bins, BoV bins shall be as per the schedule as these equipment/ apparatuses are not additional rather these are replacement items.
4) The concessionaire may deploy the future infrastructure before the due year (example: year third infrastructure may be deployed in year two) however the manpower associated with this additional infrastructure may be sourced from the existing pool of employees i.e. it is the concessionaire discretion subject to Authority's approval to deploy more manpower or not.
5) The years shall mean the anniversary date to another anniversary date of CoD.
6) The deployment of Infrastructure for the next year shall be completed within 30 (thirty) days of the commencement of new year.

15 Schedule 16: Minimum Manpower Deployment for First year[12]

The Concessionaire shall deploy following manpower

S.no	Type	Zone-5	Zone-6	Total
1	BOV Drivers	738	734	**1472**
2	Mechanical Sweepers-Drivers	2	2	**4**
3	Mechanical Sweepers-Helpers	5	5	**10**
4	Refuse Compactors (8 cum)- Drivers	50	38	**88**
5	Refuse Compactors (8 cum)- Helpers	100	74	**174**
6	Refuse Compactors (14 cum)-Drivers	12	10	**22**
7	Refuse Compactors (14 cum)-Helpers	24	20	**44**
8	Bin Washer-Drivers	4	4	**8**
9	Bin Washer- Helper	10	10	**20**
10	Horticultural Waste removal vehicle- Driver	2	2	**4**
11	Horticultural Waste removal vehicle- Helper	2	2	**4**
12	Backhoe Loaders- Drivers	2	2	**4**
13	Skid Steer Loaders-Drivers	8	8	**16**
14	HMV tipper-Drivers	2	2	**4**
15	MUV vehicle Drivers	2	1	**3**
16	Static Compactors-Drivers	20	8	**28**
17	Static Compactors-Helpers	30	14	**44**
18	LMV for carcass waste-Drivers	2	2	**4**
19	LMV for carcass waste-Helpers	4	4	**8**
20	LMV for Hotspot & other services-Drivers	44	22	**66**
21	LMV for Hotspot & other services-helpers	90	44	**134**
22	LMV for Domestic Hazardous Waste-Drivers	2	2	**4**
23	LMV for Domestic Hazardous Waste-Helpers	4	4	**8**
24	LMV for TNUHDB Area Cleaning activity-Drivers	4	2	**6**
25	LMV for TNUHDB Area Cleaning activity-Helpers	24	24	**48**
26	LMV for Horticultural Waste -Drivers	2	2	**4**
27	LMV for Horticultural Waste -Helpers	4	4	**8**
28	LMV for Priority Services-Drivers	8	4	**12**
29	LMV for Priority Services-Helpers	14	10	**24**
30	BOV Drivers for Litter free Corridor	54	42	**96**
31	Helpers for Litter free Corridor	54	42	**96**
32	Zonal Manager	1	1	**2**

[12] The minimum manpower given in this schedule is including 24% backup. i.e. 124%. It is further clarified that 100% out of 124% Manpower shall be deployed on field all time.

S.no	Type	Zone-5	Zone-6	Total
33	Assistant Zonal Manager	3	3	**6**
34	Unit Officers	10	10	**20**
35	Supervisors	27	27	**54**
36	Assistant supervisors	24	24	**48**
37	Street Sweepers	730	1032	**1762**
	Total	**2118**	**2241**	**4359**

Indicative support manpower for the Project[13]

S.no	Type of Facility	Manpower
1	Workshop	105
2	MIS	21
3	IEC activities	47
4	CCC& IT	92
5	Security for Parking stations and Workshop[14]	102
6	SPV Manpower	32
	Total	**337**

Note:

1. It is further clarified that as the takeover of the Project Area shall be progressive, so the deployment of Manpower shall be also progressive and the full deployment shall be achieved from CoD.
2. The Concessionaire shall not outsource any work which is continuous or regular in nature like: cafeteria services, security services, vehicle maintenance, office cleaning etc., however IT maintenance services, job work related to civil infrastructure creation, mechanical works etc. can be outsourced. The concessionaire shall disclose these outsourcing work.

[13] These are not the mandatory manpower to be monitored under the KPI.
[14] This is with 24% backup.

16 Schedule 17: Minimum Manpower Deployment from Year 2 to Year 10 [15]

The Concessionaire shall deploy additional manpower required Year on Year for the additional vehicles deployed. This manpower shall be over and above the minimum manpower deployed required for first year.

Zone-5									
Type of Manpower	**Year-2**	**Year-3**	**Year-4**	**Year-5**	**Year-6**	**Year-7**	**Year-8**	**Year-9**	**Year-10**
BOV drivers	20	17	21	21	22	19	26	22	24
Refuse compactors 8 cum (Drivers)	Nil	Nil	Nil	2	Nil	Nil	2	Nil	2
Refuse compactors 8 cum (Helpers)	Nil	Nil	Nil	5	Nil	Nil	5	Nil	5
Total	**20**	**17**	**21**	**28**	**22**	**19**	**33**	**22**	**31**

Zone-6									
Type of Manpower	**Year-2**	**Year-3**	**Year-4**	**Year-5**	**Year-6**	**Year-7**	**Year-8**	**Year-9**	**Year-10**
BOV drivers	17	21	22	21	19	21	24	22	21
Refuse compactors 8 cum (Drivers)	Nil	Nil	5	Nil	Nil	Nil	Nil	2	2
Refuse compactors 8 cum (Helpers)	Nil	Nil	10	Nil	Nil	Nil	Nil	5	5
Total	**17**	**21**	**37**	**21**	**19**	**21**	**24**	**29**	**28**

Note:

1. The years shall mean the anniversary date to another anniversary date of CoD.
2. The deployment of Manpower for the next year shall be completed within 30 (thirty) days of the commencement of new year.
3. The Concessionaire shall not outsource any work which is continuous or regular in nature like: cafeteria services, security services, vehicle maintenance, office cleaning, Project Facility cleaning & maintenance etc., however IT maintenance services, job work related to civil infrastructure creation, mechanical works etc. can be outsourced. The concessionaire shall disclose these outsourcing work

[15] The minimum manpower given in this schedule is including 24% backup is 124%. It is further clarified that 100% out of 124% of Manpower shall be deployed on field all time.

17 Schedule 18: Format for Performance Security[16]

B.G. No. Dated:

1. In consideration of you, Greater Chennai Corporation, having its office at Ripon Buildings, Chennai- 600003 (hereinafter referred to as "Authority", which expression shall unless it be repugnant to the subject or context thereof include its, successors and assigns) having agreed to receive the Bid of _____ [a Company registered under provision of the Companies Act, 1956/2013] and having its registered office at _____ [and acting on behalf of its Consortium] (hereinafter referred to as the "Concessionaire" which expression shall unless it be repugnant to the subject or context thereof include its/their executors administrators, successors and assigns), for the Collection & Transportation of Solid Waste, Street Sweeping Waste (including street sweeping activities), Horticulture Waste and Collection & Storage of Domestic Hazardous Waste in the Zones No 5&6 to the Designated Processing Facility/ Dump Site/ Depositing Centers of Greater Chennai Corporation (Package-6) referred to as "the Project") pursuant to the RFP Document dated***** issued in respect of the Project and other related documents (hereinafter collectively referred to as "RFP Documents"), we [Name of the Bank] having our registered office at _____ and one of its branches at _____ (hereinafter referred to as the "Bank"), at the request of the Concessionaire, do hereby in terms of sub Article 1.3.5 of Vol I read with sub Article 5.1 of Vol II A, irrevocably, unconditionally and without reservation guarantee the due and faithful fulfilment and compliance of the terms and conditions of the RFP Documents (including the RFP Document) by the said Concessionaire and unconditionally and irrevocably undertake to pay forthwith to Authority an amount of Rs_____ (Rupees _____) as Performance Security (hereinafter referred to as the "Performance Security ") as our primary obligation without any demur, reservation, recourse, contest or protest and without reference to the Concessionaire if the Concessionaire shall fail to fulfil or comply with all or any of the terms and conditions contained in the said RFP Documents.

2. Any such written demand made by Authority stating that the Concessionaire is in default of the due and faithful fulfilment and compliance with the terms and conditions contained in the RFP Documents shall be final, conclusive and binding on the Bank.

3. We, the Bank, do hereby unconditionally undertake to pay the amounts due and payable under this Guarantee without any demur, reservation, recourse, contest or protest and without any reference to the Concessionaire or any other person and irrespective of whether the claim of Authority is disputed by the Concessionaire or not merely on the first demand from Authority stating that the amount claimed is due to Authority by reason of failure of the Concessionaire to fulfil and comply with the terms and conditions contained in the RFP Documents including failure of the said Concessionaire to keep its Bid open during the Bid validity period as set forth in the said RFP Documents for any reason whatsoever. Any such demand made on the Bank shall

[16] This Performance Security shall be amended based on the Format of the Scheduled Bank at Chennai from which the Concessionaire intends to provide the Performance Security. It is further clarified that the Performance Security shall be obtained only from any of the Scheduled Bank-Chennai Branch.

be conclusive as regards amount due and payable by the Bank under this Guarantee. However, our liability under this Guarantee shall be restricted to an amount not exceeding Rs. _____ (Rupees _____ only).

4. This Guarantee shall be irrevocable and shall remain in full force and effect for the complete Concession Period or shall be periodically renewed during the Concession Period, as, the case may be, unless discharged/released earlier by the Authority in accordance with the provisions of the Concession Agreement.

5. We, the Bank, further agree that Authority shall be the sole judge to decide as to whether the Concessionaire is in default of due and faithful fulfilment and compliance with the terms and conditions contained in the RFP Documents including, inter alia, the failure of the Concessionaire to keep its Bid open during the Bid validity period set forth in the said RFP Documents, and the decision of Authority that the Concessionaire is in default as aforesaid shall be final and binding on us, notwithstanding any differences between Authority and the Concessionaire or any dispute pending before any Court, Tribunal, Arbitrator or any other Authority.

6. The Guarantee shall not be affected by any change in the constitution or winding up of the Concessionaire or the Bank or any absorption, merger or amalgamation of the Concessionaire or the Bank with any other person.

7. In order to give full effect to this Guarantee, Authority shall be entitled to treat the Bank as the principal debtor. Authority shall have the fullest liberty without affecting in any way the liability of the Bank under this Guarantee from time to time to vary any of the terms and conditions contained in the said RFP Documents or to extend time for submission of the Bids or the Bid validity period or the period for conveying acceptance of Letter of Award by the Concessionaire or the period for fulfilment and compliance with all or any of the terms and conditions contained in the said RFP Documents by the said Concessionaire or to postpone for any time and from time to time any of the powers exercisable by it against the said Concessionaire and either to enforce or forbear from enforcing any of the terms and conditions contained in the said RFP Documents or the securities available to Authority, and the Bank shall not be released from its liability under these presents by any exercise by Authority of the liberty with reference to the matters aforesaid or by reason of time being given to the said Concessionaire or any other forbearance, act or omission on the part of Authority or any indulgence by Authority to the said Concessionaire or by any change in the constitution of Authority or its absorption, merger or amalgamation with any other person or any other matter or thing whatsoever which under the law relating to sureties would but for this provision have the effect of releasing the Bank from its such liability.

8. Any notice by way of request, demand or otherwise hereunder shall be sufficiently given or made if addressed to the Bank and sent by courier or by registered mail to the Bank at the address set forth herein.

9. We undertake to make the payment on receipt of your notice of claim on us addressed to [name of Bank along with branch address] and delivered at our above branch that shall be deemed to have been duly authorized to receive the said notice of claim.

10. It shall not be necessary for Authority to proceed against the said Concessionaire before proceeding against the Bank and the guarantee herein contained shall be enforceable against the Bank, notwithstanding any other

security which Authority may have obtained from the said Concessionaire or any other person and which shall, at the time when proceedings are taken against the Bank hereunder, be outstanding or unrealized.

11. We, the Bank, further undertake not to revoke this Guarantee during its currency except with the previous express consent of Authority-In writing.

12. The Bank declares that it has power to issue this Guarantee and discharge the obligations contemplated herein, the undersigned is duly authorized and has full power to execute this Guarantee for and on behalf of the Bank.

Signed and Delivered by _____ Bank

By the hand of Mr./Ms _____, its _____ and authorized official.

(Signature of the Authorized Signatory)

(Official Seal)

18 Schedule 19: Micro Implementation and Operational Plan (MIOP)

This schedule provides the framework for preparation of MIOP for the Concessionaire. The Concessionaire shall formulate MIOP for the following project activities, but not limited to:

1.1 Consent, Clearances and Approval

The Concessionaire shall prepare a list of consent and clearances required for the Project. The Concessionaire shall define the relevant body and timeline for each consent and clearance to be obtained. IE in consultation with the concessionaire shall list those laws (bearing on the Project & IAQ) which are going to be amended and the information of those change in law is in public domain.

1.2 Labor Absorption

The Concessionaire may absorb the existing temporary manpower of the Authority for performing its operations to the maximum extent possible. Outsourcing of manpower is not allowed.

1.3 Take over Plan

The concessionaire shall prepare the takeover plan on how he is planning to take over the Project area from the Authority. The plan shall comply with the Concession Agreement provisos as detailed in Volume -II A & II B.

There shall be specific plan for Total Area Cleaning and operational framework depicting manpower to be deployed (temporary/ permanent); vehicles & earth moving equipment to be deployed (Owned or hired) including assessment of achieving total satisfactory Total Area Cleaning.

1.4 Route Plan/Beat-wise Plan for Primary Collection

Concessionaire shall prepare micro level route /beat-wise plan for all the wards. The Plan shall specify location, dedicated timing, manpower, supervisory staff and infrastructure, allocated secondary collection points for waste storage for each route/beat. The Concessionaire shall also take into account extraordinary circumstances and make modifications in the plan accordingly.

1.5 Route Plan for Secondary Collection and Transportation

Concessionaire shall prepare route plan for secondary collection and transportation. The Plan shall specify the dedicated timing for specific routes, secondary collection points, secondary collection vehicles, manpower, and supervisory staff for all the routes.

1.6 Route Plan for Collection of Street Sweeping Waste

Concessionaire shall prepare micro level route /beat-wise plan for all the roads/streets. The Plan shall specify location, dedicated timing, manpower, supervisory staff and infrastructure (mechanical sweepers and bins) and allocated secondary collection points for waste storage for each route/beat. The Concessionaire shall also take into account extraordinary circumstances and make modifications in the plan accordingly.

1.7 Route Plan for Collection of DHW

Concessionaire shall be responsible for collecting segregated domestic hazardous waste from the households on bi-weekly basis and transporting it to the Deposition Centre for its safe storage. Concessionaire shall prepare micro level route /beat-wise plan for bi-weekly collection of DHW to be accommodated/ integrated in primary collection.

1.8 Plan for Removal of Garden and horticultural waste

The Concessionaire shall prepare plan for removal of horticultural waste and garden waste generated in the project area. The removal shall be done with the help of specialized equipment. The concessionaire shall also be prepared for emergency situations for removal of garden and horticultural waste

1.9 Asset Deployment Schedule

The Concessionaire shall prepare an Asset Deployment Schedule. The Schedule shall specify the asset deployed for all the activities as required for fulfilling the Project Scope.

1.10 Allocation of Priority Services Team

Concessionaire shall deploy a Priority Services team consisting of six workers and one vehicle per zone for extraordinary circumstances. The Concessionaire shall nominate one nodal person under MIOP for each zone that shall be responsible for allocation of the Priority Services Team. Priority Services Team shall be assembled within two hours.

1.11 Supply of minimum guaranteed waste to the decentralized units

The Concessionaire shall fulfil the obligation of providing the required quantity of biodegradable and recyclable waste to the decentralized units. In this respect, the Concessionaire shall refer to section 4.4.8 under PIM, prepare a list of decentralized units and update the list, as the case may be. The Concessionaire shall define the capacity of decentralized plants, respective waste diversion quantities and the planned sources, from where the waste shall be diverted.

1.12 Supply of waste to Dump site/Centralized Processing Facilities

The Concessionaire shall fulfil the obligation of providing the required quantity of waste to the proposed centralized processing facilities based on the requirements of the Authority.

1.13 Operation and Maintenance Plan for DHW Deposition Centers

The Concessionaire shall be responsible for the operation and maintenance of DHW Deposition Centers. The Concessionaire shall deploy necessary manpower for the functioning of DHW Deposition Centers. The Plan shall include the no. of deposition centers, dedicated locations attached with the center and the quantity of DHW. The Concessionaire shall indicate the schedule for the secondary transportation of DHW to Hazardous Waste Facility. The Authority shall be responsible to take note of the schedule and organizing secondary transportation of DHW.

1.14 Operation and Maintenance Plan of Static Compactor

The Concessionaire shall prepare the O&M plan for managing the static compactors and their locations. The plan shall contain measures on how to control odor and leachate generated during the operations. In

addition to this route plan shall also be prepared on how & when the waste shall be transported/ evacuated so that there shall be minimal disturbance to the public.

1.15 Collection and Transportation of Solid Waste/silt from Canal/Riverbanks

Concessionaire shall be responsible for the collection and transportation of solid waste/silt lying at the banks of canal/river falling within the project area. Concessionaire shall include the list of stretches in the MIOP. The Plan shall assign necessary manpower and equipment's for collection of waste from those stretches. The locations shall be finalized in consultation with the Authority.

1.16 TNUHDB Area Cleaning Activity

The Concessionaire shall prepare plan on how conservancy activities will be carried out in TNUHDB Area. The plan shall indicate frequency, manpower, vehicle to be deployed for the TNUHDB Area cleaning as indicated in Schedule 1 of this RFP.

1.17 Management Information System

The Concessionaire shall set-up a real-time monitoring system for tracking the daily Project Activities. The Concessionaire shall prepare MIS Formats for reporting the performance to IE and Authority on daily, weekly and monthly basis. The Concessionaire shall prepare a list of all moveable assets, bins and equipment's along with its RFID no. The Concessionaire shall also specify space requirement for setting-up centralized Control Room in MIOP.

1.18 Complaint Redressal System

The Concessionaire shall set up Complaint Redressal System for handling complaints related to Solid Waste. The Concessionaire shall prepare daily log of complaints received, action taken and complaints closed. The Concessionaire shall also display telephone nos. of concerned officials at public locations.

1.19 Financial Model

The Concessionaire shall submit a soft copy (excel format) of the Financial Model for this Project

1.20 Asset Maintenance Schedule (O&M plan)

The Concessionaire shall prepare a maintenance schedule for all the project assets. The Schedule shall be made for all the vehicles, equipment's and bins. The Schedule shall contain the GPS no., date of purchase of asset, servicing schedule and servicing report. The Concessionaire shall also specify the replacement schedule for the project assets. The Schedule shall be in alignment with the KPIs.

1.21 Litter Free Corridor plan

The Authority shall identify the Area / Location(s) / road segment / public places which needs to be maintained as Litter Free corridor / Litter free Area. The Concessionaire shall prepare a operational schedule for maintaining the specified areas as Litter Free corridor.

1.22 Disaster Management Plan

The Concessionaire shall prepare Disaster Management Plan as per the conditions given in Schedule 22.

1.23 EHS Plan

The concessionaire shall prepare EHS plan on how the EHS compliances shall be adopted for the project. The EHS plan shall be in accordance with Schedule-9.

1.24 IEC Plan

The Concessionaire shall prepare IEC Plan as per the schedule -12 for creating awareness regarding solid waste management activities. Concessionaire shall specify frequency of IEC program, type of activity, population coverage and maintain records of activities including photographic evidences.

1.25 Seasonal Action Plan (SAP)

The Seasonal Action Plan shall be a plan within the MIOP. SAP shall be for three periods

1. Southwest Monsoon Period,

2. North-East Monsoon Period and

3. Non-Monsoon Period.

The SAP may have variance pertaining to KPI applicability, manpower deployment, operation timing, issues about labor absenteeism, deployment of vehicle due to water logging etc. Also, the Concessionaire may indicate the special labor provision (to be hired for temporary purpose), special vehicle provisions (to be hired for temporary purpose), special tools & tackles,

1.26 Carcass Disposal

The Concessionaire shall deploy one vehicle per zone for collection and transportation of carcasses to the designated facility/ site as prescribed by the Authority during the preparation of MIOP

1.27 Additional Services

The Concessionaire in consultation with the Authority shall prepare plan on: how additional special services can be rendered for burial ground cleaning, mass cleaning, residential areas of public representative / public servants, public gathering locations litter picking for hot spots,, funeral procession, weed cleaning, removal roadside dust/ pebbles/ stone chips etc. The additional services shall be finalized in consultation with Authority.

1.28 Night Conservancy works

The Concessionaire shall deploy required manpower and infrastructure to perform night conservancy which shall include a minimum of 50 (fifty[17]) percent of street sweeping and clearance of waste from RC Bins.

[17] Concessionaire may increase 50% of conservancy work to 90%.

Indicative Norms to be considered by the Concessionaire while preparing MIOP

S.no	Activity	Indicative Norms
1	Battery Operated Vehicles	One e- rickshaw for collection from 450 HH (as per Authority recommendation)
2	Street Sweeping (manual)	One labor for manual sweeping for 500 m of road or 250 m of road in case of roads with center median
3	Clearance of bins from market areas and Bus Route Roads	Three times a day or as per MIOP in force, including clearance during night shifts.
4	Night conservancy timings	From 10.00 pm to 5.00 am[18]
5	Clearance and bins from commercial and hot spot locations	Minimum two times a day or as per the MIOP in force.
6	Deployment of Mechanical Sweepers	Roads having width of 6m and above in BRR.
7	Cleaning of waste from canal/riverbanks	1. Fortnightly clearance of waste from canal/riverbanks (no inside water) 2. Continuous clearance of waste from Hot-Spots in two shifts; 3. Continuous clearance of waste or litter from the Litter Free Corridor in two shifts; .
8	Refuse Compactor Bins	Green for wet waste, blue for dry waste and black for street sweeping waste. Bins may be placed based on approval of Authority and based on public needs[19].
9	Back up	- Minimum 10% backup on E-rickshaw required; - 10% back up on Refuse compactors (8 and 14 cum)

18 The concessionaire shall have options to modify the shift timing as per the operational requirement, further to this Concessionaire may have different shift timing for wards or zone or location within zone.
19 In case there is resistance from the public about placement of bins and the Authority has not addressed the issue for continuous period of 15 (fifteen) calendar days after receipt of written communication from the concessionaire, the concessionaire shall have discretion not to install the RC Bins and the Authority shall neither issue verbal order or written order in this respect to the concessionaire.

19 Schedule 20: Area Based Pro-Rata Rate Payment (ABPRR)[20]

Zone-5	WARDS	Area (sqkm)	ABPRR
Royapuram	49	0.78	
	50	1.54	
	51	0.40	
	52	1.04	
	53	0.85	
	54	0.59	
	55	0.57	
	56	0.57	
	57	0.91	
	58	2.59	
	59	2.82	
	60	5.14	
	61	2.22	
	62	0.83	
	63	0.96	
	Total	**21.81**	

Zone-6	WARDS	Area (sqkm)	ABPRR
Thiru. Vi.Ka Nagar	64	1.59	
	65	1.88	
	66	1.03	
	67	0.90	
	68	1.39	
	69	1.05	
	70	1.73	
	71	1.53	
	72	1.32	
	73	0.93	
	74	0.95	
	75	0.95	
	76	0.62	
	77	0.57	
	78	0.67	
	Subtotal	**17.11**	

[20] To be filled at the time of signing of the Concession Agreement.

20 Schedule 21: Operation and Maintenance Plan

The Concessionaire shall prepare and update Operations and Maintenance Manual (O&M Manual) covering all aspects of O&M of movable and immovable infrastructure associated with Project[21]. This O&M Manual may be a part of the MIOP: The O&M Manual shall contain the following, but not limited to:

1) The Concessionaire shall submit Standard Operating Procedures (SOP) for all the equipment's and vehicles.
2) The Concessionaire shall ensure Operation and Maintenance of all the vehicles and equipment's is performed as per the manufacturer's specifications.
3) The Concessionaire shall make an O&M Plan of various infrastructure, following the Technical Specifications set out in this document (Schedule 21)
4) The Concessionaire shall report preventive maintenance schedule for all the equipment's and vehicles in their monthly MIS Report. The Concessionaire shall also provide information of any unscheduled repair and maintenance service in the monthly MIS report.
5) The Concessionaire shall do painting of all the Movable Assets as well as all the fixtures using anticorrosive paint on yearly basis.
6) The Concessionaire shall maintain a team of employees (an O&M Team) of skilled & qualified persons for the operations and maintenance of the equipment's and vehicles.
7) The Concessionaire shall ensure that the collection bins, vehicles and equipment are in good condition and are cleaned as per the schedule plan using disinfectants.
8) The Concessionaire shall ensure that all the electro-mechanical equipment, GPS in vehicles, RFID Tags, RFID Readers, Biometric Attendance system, IT Infrastructure, Camera, Litter Bin & stand, Roller bins, BOV Bins, are in aesthetically in good working condition.
9) The Concessionaire shall ensure that the vehicles do not leak leachate during transportation of waste[22].
10) The Concessionaire shall maintain the RC bin locations without any littering & without leachate stagnation[23].
11) The Concessionaire shall ensure all the vehicles are duly registered and insured and shall meet all the relevant norms of applicable Motor Vehicle Act and Transportation Act.
12) In addition to the infrastructure requirements, the Concessionaire is desired to maintain sufficient spare infrastructure/ movable assets to achieve the operational efficiency as per the KPI targets, and the sufficient spare infrastructure/ movable assets to be detailed in the MIOP.

Note: IE shall be responsible for conducting periodic inspection of the Project Assets.

[21] As the case may depending on the type of asset in question, the concessionaire may refer to CPHEEO Manual or Manufacturer Manual or the CPWD manual or as per the Good Industry Practice.

22 IE shall be responsible for conducting periodic inspection of such compliances and do at least 10 (ten inspection) every day. IE shall take time and date stamped photographs and shall upload those.

[23] IE shall be responsible for conducting periodic inspection of such compliances and do at least 10 (ten inspection) every day. IE shall take time and date stamped photographs and shall upload those.

21 Schedule 22: Disaster Management Framework

A. The Concessionaire shall prepare the Disaster Management Plan pertaining to Collection & Transportation of Solid Waste in Project Area as per the guidelines provided in/ by:

1) National Disaster Management Authority/ State Disaster Management Authority

2) Technical Note on Solid Waste Management during Emergencies by WHO Regional Office for South-East Asia

3) City Disaster Management Plan, 2017 for Chennai prepared by the Authority[24]

4) Any other relevant documents vetted by the Authority

B. The Concessionaire shall prepare Disaster Management Plan pertaining to Collection & Transportation of Solid Waste in Project Area for the following types of Disasters (as per applicability):

i. Hydro- Meteorological (Examples: Cyclones, Droughts, Coastal Erosion)

ii. Geological (Examples: Landslide, Tsunami, Earthquakes)

iii. Chemical, Industrial & Radiological

iv. Accidents (Example: Urban Fire Building, malls, petrol pumps, vehicles), Vehicular Accidents, Poisoning, Blast at Domestic Hazardous Waste Deposition centers etc.)

v. Biological (Examples: Diseases like pandemic, Pests, exposure to biological vectors etc.)

C. The concessionaire shall hire (standby) manpower & resources for Predicted Disaster[25], and shall mobilize those resources as and when the disaster strikes. The guidance shall be-

(i) Within it's employee resources the Concessionaire shall notify 10% of it's employee as "Disaster Volunteer"

(ii) Shall maintain at least two motorized boat for rescue ;

(iii) A list of vehicles hiring agency from which tractors or tippers can be hired;

(iv) Implements – Axe, motorized axe, rain coat, gum boot, high water wading capacity vehicles; sickles, pointed iron rod etc.

(v) Labor supply agencies.

D. The Concessionaire shall specify the requirements for additional manpower and infrastructure if any. Moreover, the requirements from the authority in terms of logistics & management shall be clearly specified.

E. The Disaster Management Plan prepared by the Concessionaire shall be in sync with the overall City Disaster Management Plan, 2017 for Chennai prepared by the Authority

F. The additional payment claim during Disasters by the concessionaire shall be as per the actuals. Also, the payment shall be based on Disaster Management KPIs which shall be finalized by the IE & the Authority on the basis of the Disaster Management Plan to be included in the MIOP.

[24] At the time of preparation of MIOP, the Concessionaire shall obtain a copy form Authority and prepare Disaster Management Plan.

[25] Predicted Disaster are those disaster for which the Competent Authority has already issued warning – like Cyclone, Flood, Heavy Rain, Pandemic etc.

22 Schedule 23: Project Site Office for IE

Main Office:

Greater Chennai Corporation,

Ripon Building,

Chennai-600003.

Regional Office: (Regional Deputy Commissioner North for Zone-5)

No.62, Basin Bridge Road, Old Washermenpet, Chennai-600021

Zonal Office: Zone-5

No.62, Basin Bridge Road, Old Washermenpet, Chennai-600021

Regional Office: (Regional Deputy Commissioner Central for Zone-6)

Door No.36B, 2nd Cross Street, Pulla Avenue, Shenoy Nagar, Chennai - 600030

Zonal Office: Zone-6

No.158, Strahans Road, Pattalam, Chennai - 600 012.

23 Schedule 24: Escrow Agreement

This Project Escrow Agreement (this " Escrow Agreement") is entered into on _____by and among:

THE GREATER CHENNAI CORPORATION, established under the Chennai City Municipal Corporation Act 1919, represented by its Commissioner and having its principal office at Greater Chennai Corporation, Ripon Building, Chennai 600003 (hereinafter referred to as the **"Authority" (**which expression shall, unless excluded by or repugnant to the context, be deemed to include its administrators, successors and assigns) OF THE ONE PART;

AND

[*Please insert name of the company*], a company incorporated under the provisions of the Companies Act, 1956/2013 with CIN [•] and having its registered office at [•], Chennai, (hereinafter referred to as the "**Concessionaire**" (which expression shall, unless repugnant to the context or meaning thereof, include its successors and permitted assigns) OF THE SECOND PART;

AND

[*Please insert name of the Bank*], a Bank incorporated under the provisions of the Banking Regulation Act 1949 established and amended in 2013, and the Bank is in the list of Scheduled Banks of the Reserve Bank of India, having its registered office at [•],(hereinafter referred to as the "Escrow Agent" (which expression shall, unless repugnant to the context or meaning thereof, include its successors and permitted assigns) OF THE THIRD PART

The Authority, the Concessionaire and Escrow Agent are herein after referred to individually as the "Party" and collectively as the "Parties";

WHEREAS:

A. According to the Concession Agreement entered into on _____ between Authority and the Concessionaire (the "Concession Agreement"), the Authority and the Escrow Agent shall establish an Escrow Account for the benefit of the Concessionaire. The Authority shall fund such account (pursuant to the terms of this Agreement), which shall serve to secure Authority's payment obligations towards the Concessionaire under the Concession Agreement.

B. The Escrow Agent is willing to serve as an escrow agent in accordance with the terms and conditions of this Agreement.

C. Unless otherwise defined herein, all capitalized terms shall have the meaning ascribed to them in the Concession Agreement.

NOW, THEREFORE, the Parties hereto agree as follows:

1. ESCROW ACCOUNT ("PROJECT ACCOUNT")

   i. Appointment

      The Authority and the Concessionaire hereby appoint the Escrow Agent to serve as the escrow agent for the purposes of this Agreement and subject to the terms of this Agreement and the Escrow Agent hereby accepts this appointment.

   ii. Escrow Account

Within 15 (Fifteen) Working Days from the date of Financial Closure hereof, the Authority and the Escrow Agent shall establish an escrow bank account denominated in Indian Rupees for the benefit of the Concessionaire (the " PROJECT ACCOUNT").

iii. Deposit and Replenishment Request

a. Within thirty (30) days of signing of the Escrow Agreement ("Project Account Agreement"), the Authority shall deposit an amount equal to 2 (two) months of the applicable Monthly Quote (the "Initial Escrow Amount") into the Escrow Account;

b. In the event that the amount in the Project Account falls below 50% (fifty percent) of the Initial Escrow Amount, the Escrow Agent shall send a written request ("Replenishment Request") to the Authority to replenish the Project Account and with a copy to the Concessionaire for the same.

c. The Authority shall replenish the Escrow Account so that the amount present in the Escrow Account equals to two months of the applicable MQ and thereafter the Escrow Agent shall intimate the Concessionaire.

d. The amount equal to two months of the applicable MQ and any other deposits made (if applicable) shall be referred to as the "Escrow Amount".

iv. Identification and Separation

The Escrow Agent shall clearly identify in its records the Escrow Account as an escrow account and shall keep the funds standing to the credit of the Escrow Account segregated from and not commingled with the Escrow Agent's own funds or the funds of any of its other customers or third parties.

v. Fees

a. The Fees to be paid to the Escrow Agent for the establishment and management of the Escrow Account shall be borne equally by the Authority and the Concessionaire.

b. Any payment made by the Authority under this Agreement shall be made from the following account or from such other account which Authority may designate from time to time:

Bank:

Account number:

BIC (SWIFT):

Address of Bank:

vi. Escrow Account Statements

The Escrow Agent shall provide monthly statements regarding the Escrow Account to Authority and the Concessionaire.

2. <u>ESCROW AMOUNT</u>

a. The Escrow Agent shall hold the Escrow Amount in escrow for the sole benefit of the Concessionaire. The Escrow Agent shall not release any of the Escrow Amount for any person other than the Concessionaire. In particular, the Escrow Agent shall not accept any requests for withdrawals or transfers of the Escrow Amount from the Authority for the benefit of Authority or any third party, unless it is made in accordance with this Agreement.

b. The Escrow Agent shall not apply any right of set-off against the Escrow Amount, grant any lien over the Escrow Amount, or apply any fee or deduction in relation to the Escrow Amount.

c. At the end of each anniversary of COD year, the Escrow Agent shall transfer into an account of the Authority as the Authority shall designate, any amount exceeding an amount equivalent to two months of the applicable MQ and any other deposits made (if applicable).

3. PAYMENT

a. Each month, the Concessionaire shall raise the FP and PP invoices (two copies each) and send it to the Authority/ IE, with a copy to Escrow Agent as per the sub Article 8.8.

b. The Escrow Agent shall make the relevant payment to the Concessionaire based on the recommendation of the Authority within a period of 30 [thirty] days.

c. At the end of the Concession Period or on the Termination Date, as the case may be, the Authority shall send instructions to the Escrow Agent requesting him to release and transfer any due and payable amounts to the Concessionaire and any remaining amounts to be transferred to Authority.

4. OBLIGATIONS OF THE ESCROW AGENT

I. The obligations of the Escrow Agent under this Agreement are subject to the following terms:

a. The duties of the Escrow Agent are only as herein specifically provided and are purely administrative in nature.

b. The Escrow Agent shall neither be liable for, nor chargeable with knowledge of, the terms and conditions of any other agreement, instrument or document in connection herewith, including, without limitation, the Concession Agreement, and shall be required to act in respect of the Escrow Account only as provided in this Agreement. This Agreement sets forth all the obligations of the Escrow Agent with respect to any and all matters pertinent to the Escrow Account contemplated hereunder and no additional obligations of the Escrow Agent shall be implied from the terms of any other agreement.

c. The Escrow Agent shall incur no liability in connection with the discharge of its obligations under this Agreement or in connection therewith, except such liability as may arise from the Escrow Agent's negligence, willful misconduct or otherwise from any breach of this Agreement. Such liability, however, shall not exceed the amount on the Escrow Account outstanding at the date of the said breach by the Escrow Agent;

II. In the event that the amount in Escrow Account falls below 50 (fifty) % of the value of two months of the applicable MQ or on payment to the Concessionaire for two months, whichever is earlier, the Escrow Agent shall send a written request
("Replenishment Request") to the Authority to replenish the Project Account and shall intimate the Concessionaire for the same.

III. Thereafter the Escrow Agent shall notify the Concessionaire about the replenishment of Escrow Account by the Authority.

IV. The Escrow Agent shall not be required to perform any acts which will violate any laws or regulations applicable in India and in the State of Tamil Nadu;

V. In the event of any bankruptcy proceedings or enforcement proceedings against any of the Parties pursuant to applicable laws or regulations, the Escrow Agent shall, notwithstanding the provisions of this Agreement, act and perform in accordance with the applicable laws or regulations.

5. REPRESENTATIONS AND WARRANTIES

Each Party represents and warrants that, as of the date hereof and in the foreseeable future:

i. has the authority to enter into this Agreement;

ii. this Agreement constitutes a legally valid and binding obligation, enforceable against it in accordance with its terms;

iii. its entry into and/or performance under this Agreement will not be in breach of any express or implied terms of any contract with or other obligation to any third party; and

iv. it is solvent and able to perform all of its obligations under this Agreement.

6. MISCELLANEOUS

I. Notices

Any notice or other communication to be given or made under this Agreement to the Parties shall be in writing. Except as otherwise provided in this Agreement, such notice, request or other communication shall be delivered by registered mail or facsimile to the

Party(ies) at the following addresses

AUTHORITY: _____

The Escrow Agent: _____

The Concessionaire: _____

II. Entire Agreement

This Agreement constitutes the entire agreement and understanding between the Parties with respect to its subject matter (i.e. escrow arrangement) and replaces and supersedes all prior agreements, arrangements, undertakings or statements regarding such subject matter.

III. Amendments

No variation of or amendment to this Agreement shall be effective unless made in writing and executed by all the Parties hereto.

IV. Assignment

Neither this Agreement nor any of the rights or obligations hereunder may be assigned by a Party without the prior written consent of the other Parties.

V. Severability

Whenever possible, each provision of this Agreement shall be interpreted in such a way as to be effective and valid under law, but if any provision of this Agreement is unenforceable or invalid under law, such provision shall be ineffective only to the extent of such unenforceability or invalidity, and the remaining provisions of this Agreement shall continue to be binding and in full force and effect.

VI. Confidentiality

Unless otherwise determined by a competent jurisdiction, the Parties, their employees, representatives and agents shall keep the provisions of this Agreement strictly confidential and, except as may be required by law, shall make no disclosure thereof to any person, except the Parties'

respective legal counsel and professional advisers, without the prior written consent of the other Parties.

VII. Termination

This Agreement shall be automatically terminated upon the expiry of the Concession Period, as defined in the Concession Agreement, or on the Termination of the Concession Agreement. It may also be terminated earlier if Authority and the Concessionaire agree to terminate the Agreement and send a termination notice to the Escrow Agent.

VIII. Dispute Resolution Mechanism

a. This Agreement shall be governed by and construed in accordance with the laws of India and the laws of the State of Tamil Nadu. If any dispute arises out of or in connection with this Agreement, this dispute shall not affect the Parties' duty to continue the performance of all of their no disputed obligations.

b. If any dispute arises, either Party shall give notice to the other Parties of the same, whereupon the Parties shall meet promptly and in a good faith to attempt to reach an amicable settlement.

c. All disputes not settled amicably pursuant to sub-Article above shall be heard by the Madras High Court at Chennai.

7. Withdrawals upon Termination

Upon Termination or Expiration of the Concession Agreement, all amounts standing to the credit of the Escrow Account shall, notwithstanding anything in this Agreement, be appropriated and dealt with in the following order:

a) all taxes due and payable by the Concessionaire for and in respect of the Project.

b) outstanding Payments.

c) all payments and Damages certified by the Authority as due and payable to it by the Concessionaire pursuant to the Concession Agreement.

d) any other payments required to be made under the Concession Agreement; and

e) balance, if any, in accordance with the instructions of the Authority:

IN WITNESS WHEREOF, each Party has duly executed this Agreement in four (4) originals on the date set out on the first page hereof.

SIGNED SEALED AND DELIVERED

For and on behalf of the Authority by (Signature)

(Name)

(Designation)

SIGNED, SEALED AND DELIVERED

For and on behalf of CONCESSIONAIRE by

SIGNED, SEALED AND DELIVERED

In the presence of.

1)

2)

24 Schedule 25: Minimum Technical Specifications of Project Assets

This schedule list out the broad technical specifications of infrastructure to be deployed by the Concessionaire for Project operations.

24.1 Technical Specifications of BoV

The broad technical specification for BoV is being detailed as hereunder:

S.No	Description	Specification
1.	Purpose	Fully Electric, battery automated and motor driven shall be able to carry 6 HDPE bins of 80 litres capacity for waste collection.
2.	Wheelbase	2100 mm
3.	Load Body: Dimensions	1400mm*1000mm*550mm (L*W*H)
4.	Motor	1250-1500 W/48V BLDC motor
5.	Transmission	Differential- 2 gear shift
6.	Ground Clearance	180mm
7.	Rear cargo Box	1. Not less than 1400 mm* 1000 mm* 450 mm (L*B*H) 2. overall dimensions shall be fabricated using steel 3. Rear door: shall be foldable single door arrangement going down. 4. Side doors: shall be foldable single door arrangement going down. 5. Both side doors shall be made of M.S sheet of thickness not less than 0.6 mm 6. Flooring: shall be corrugated high strength steel and having thickness not less than 1.6mm. 7. All the hinges shall be steel. 8. The vehicle color shall be either white or any other color decided between the Parties including decals. 9. The paint shall be corrosion resistant.
8.	Pay load	Up to 400 kg
9.	Running capacity	Not less than 40 km per charge
10.	Speed of the vehicle	up to 25 km/hr.
11.	Grade ability (climbing ability)	7 degrees
12.	Brake system	Drum Brake hydraulically actuated
13.	Wheel and tyres	2.15 J*12”, 6PR, 3.75-12”
14.	Battery capacity	Lithium-Ion, 48 V 75 Ah

S.No	Description	Specification
15.	Seating capacity	Cushioned seat for Vehicle driver
16.	Cabin	Weatherproof complete metal enclosed cabin with wind screen glass for driver protection with necessary frame structure for protection from heat and rain.
17.	Gross Vehicle Weight	975 kg
18.	Charger	Off Board Charger
19.	Suspension	Front – Hydraulic 43mm Rear - leaf Spring with dampener
20.	Accessories	1. Space reserved for the introduction Radio Frequency Identification (RFID) tags. 2. Vehicle must be equipped with GPS systems fitted by OEM (non-detachable) 3. Head lamp, front and rear indicators. 4. Fire extinguishers. 5. First Aid Kit. 6. Small fan. 7. Functional safety by providing circuit breaker. 8. Speaker to be fitted during Door-to-Door collection.

a) Fitness/compliance test ae per the Ministry of Road transport and highways GSR No. 709 (E) dated 8 October 2014 and subsequent amendment thereof.

b) Compliance certificate for the following test to be carried out as per the safety standards for E-Rickshaw/E-carts as per the Ministry of Road Transport and Highways notification No. S.O. 2590 (E) dated 8 October 2014 and any subsequent amendment thereof.

c) The Concessionaire is required to deploy licensed operators for operating e- rickshaw as per the Applicable Law.

d) For very narrow lanes, the Concessionaire may design specific BoV for solid waste collection.

e) The concessionaire may change the specifications of vehicles as detailed above to higher specification; however, in no case the number of vehicles as detailed in the Schedule -14 shall not change unless otherwise applicable provisions of the Concession Agreement.

24.2 Technical Specifications of wheeled bin for Street Sweeping

A. Basic Technical Parameters

I. Volume : 120 Litres

II. Maximum recommended payload : 48 kgs

III. Raw Material : Virgin injected High Density Polyethylene (HDPE) or higher material possessing higher strength and plasticity.

IV. Constitutive element : Body, wheels and wheels axle.

V. Body Type : CEN A (norm-DIN)

VI. Quality Certification : Certified ISO 9001, ISO 14001

B. Dimensions

I. Dimensions (without lid) : 882 mm

II. Top OD : 560 (L) mm * 477 (B) mm

III. Bottom OD : 495 (L) mm * 490 (B) mm

C. Wheels

2 wheels having diameter of at least 200 mm with rubber (outer surface) tires for quiet, smooth, and reliable operation where wheels shall withstand load during movement with load of waste.

Note:

1) The above technical specifications can be modified by the Concessionaire for higher capacity and quality[26].
2) It is further clarified that above are minimum quality & technical parameter which the concessionaire must meet.

24.3 Technical Specification of Pole Mounted Litter Bins

Two litter bins of 60 liters capacity having body material of stainless steel mounted on stainless steel pole shall be placed by the Concessionaire at the locations decided in the approved MIOP.

Features	**Description**
Structure	Standing and bin shall be open top
Color	Stainless Steel : mirror finish or matt finish
Size of bins	14” * 24”
Capacity of bins	60 liters each
Grade of Bins and Pole	SS 304
Other features	Anti Stary animal spillage lock system, Anti-theft locking, with branding/ signage. Tilting operation. Rain shed. One Bin shall have green sticker to wet waste and other bin shall have blue sticker for dry waste. **Garbage covers (black polythene) to be placed inside the bins always for easy waste collection and removal process.**

[26] The concessionaire shall only intimate the change to higher specification along with all technical details and the consent shall not generally be denied by Authority / IE.

Reference image	

24.4 Technical Specifications of Refuse Compactor Bins of 1.1 M^3 Capacity

The bin construction shall be of galvanized steel section for ensuring adequate structural strength required for handling with the compactor truck bin lifter.

The broad specifications are: Flat, rotationally- molded, double skinned plastic lid of a design that makes a good seal against the bin to act as an anti-fire stop and minimize the risk of a fire being sustained when the lid is closed. Must have superior smooth surface finish including UV inhibitors for colour fastness with epic coated.

a) Capacity : 1.1m3±5%
b) Sheet thickness : all sides are 1.6mm thick sheet, and the bottom 2mm thickness Sheet
c) All sides are : Robotic Machine Welded to avoid trap of waste
d) Empty weight : 96 Kgs and as per EN840[27] standard with lid 102kgs.
e) Bins must be : at least EN-840-3; Parts 2,5,6 certificate or equivalent Indian Standard.
f) Load Weight : 660kgs.
g) Material : Hot-Dip Galvanized in zinc to EN 1461 for maximum corrosion protection.
h) Welding : Seamless welding on the inside so no places to trap waste.
i) Internal angle : Curved internal angles on the inside.
j) Leachate Plug : Drain plug in the base to allow the drainage of liquid.
k) Four heavy duty, steel-centered, 200mm diameter, rubber tyred castors (wheels) :
    1) Two of the castors (wheels) at the front have foot-pedal operated brakes and are of the trailing design so the foot pedal presents itself to you when the bin is moved. Foot- pedals tested for 20,000 on/off operations.

[27] Similar Indian Standards shall be acceptable.

2) Two of the castors (wheels) at the back are plain swivel castors (wheels).
3) Castor bracket thickness is 3.5 mm.

l) Comb Lifting (Frontal Receiver) Bar of the most durable Form C design, made of a single rolled section with 4 Ribs to limit lateral movement for strength. Works with refuse vehicle bin lifts meeting EN 1501-5.

m) DIN Lifting Points (Side Trunnions) for lifting with DIN arms, to be bolted on locally. EN 14803 compliant receptacle in the comb bar to accommodate an RFID chip that gives a 100% read with refuse vehicle-based identification / weighing systems that meet the EN 14803 standard.

n) Steel sheet with whole body Hot Dip Galvanized With 70 And above Microns Coated In 400 Degree Heat to Avoid Corrosion in all Climactic Conditions.

o) Provided with Drain System at the bottom of the bin.

24.5 Technical Specifications of Refuse Compactors (14 cum capacity)

General: The Refuse Compactor Vehicle shall be of universal type and suitable for changing fields of operation. It should be easy to handle and should allow the operating personnel to operate the vehicle with minimum physical effort and maximum safety. The vehicle should be capable of automatically loading and unloading solid waste from closed containers of 1100 liters capacity as quick as possible, with facility for automatic opening of Bin Lid / Cover when in fully lifted condition in compactor hopper, with inbuilt link arrangement of Bins.

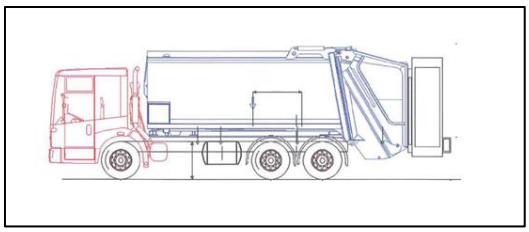

Figure 1: Refuse compactor

1. Body & Ejector Plate

a)	Material	: IS 2062 E250
b)	Roof	: 3 mm thickness
c)	Sides	: 4 mm thickness
d)	Flooring	: 6 mm thickness
e)	Rear Cross Bar	: 6 mm thickness

2. Tail Gate

a)	Side	: 4 mm, IS 2062 E 250
f)	Rear Side Hopper	: 5mm, IS 2062 E 250
b)	Bottom of Hopper	: 6mm, IS 2062 E 250
c)	Reinforced with suitable	: 6mm, IS 2062 E 250
d)	Sweep/Packer Blade thickness	: 5 mm thickness

3. Ejection System

a)	Ejector Plate	: 4 mm, IS 2062 E 250
b)	Pads	: 8 nos. Aluminum bronze pads

4. Hydraulic System

a) Hydraulic pump : Directly mounted on power take off on gear box

b) Pressure developed : Minimum 140 Kg/per cm. Sq.

c) Working Speed : 1200 RPM Approximately.

5. Hydraulic Cylinder

Minimum number of cylinders : 09 nos. (7 double acting and 2 single acting)

Description

The compactor body will be constructed of steel as per the details given.

a) The Compactor body will have inside volume of Min. 14 cubic meter and will be suitable to carry pay load of minimum 8 tons.

b) The equipment will be rear loading type and will be able to unload 1100 liter containers having lid.

c) The height of hopper for manual loading will not be more than 800mm to 1000mm.

d) The Construction of the vehicle will consist of the body, the ejector plate, the tailgate and hydraulically bin loading system.

e) The tailgate will be equipped with heavy duty turn buckle one on each side to hold tailgate and body together.

f) The tailgate will be provided with study arrangement for raising and controlling of descent

g) Hose burst, non-return valves or similar arrangement will be provided to prevent the tailgate descending suddenly in the event of hydraulic failure.

h) Lever will be provided on the rear side of the vehicle to start packing mechanism arrangement will be provided to stop the system instantaneously with the help of lever provided at the rear of the vehicle.

6. Hydraulics

The Vehicle Chassis will be selected to mount hydraulic equipment easily as per given specification.

Arrangement to have direct drive or shaft drive from PTO to the hydraulic pump will be made.

The following reputed makes of hydraulic equipment will only be fitted on the vehicle.

S.No	Components	Supplier
1	Power Take Off (P.T. O)	A reputable Vehicle Manufactures
2	Pump	A reputable Vehicle Manufactures
3	Hydraulic Cylinders	Reputable company
4	Valves	Reputable company
5	Hydraulic Hoses	Reputable Equipment Manufactures

The pump will be directly coupled with power take off and will develop sufficient pressure to create the complete hydraulic system. The necessary valves will be provided, so as to have the simultaneous operation of the system.

Suitable hydraulic tank with air breather cum filter will be provided. The filter will be provided at the inlet line and return line. Separate leachate tank – 80 liters will be provided.

7. Hydraulic Cylinder

- There will be maximum 9 hydraulic cylinders, out of which 7 will be double acting and 2 will be single acting.

- The Hydraulic cylinder tube will be made of ST52 of equivalent high tensile steel.
- The piston rod will be corrosion resistance ground and hard chrome plated. The gland and piston will be made of EN 8 material.
- The seal will be of high polyurethane.
- 02 numbers of single acting Cylinder will be used for lifting and lowering tailgate. The ejector plate will be provided with double acting telescopic cylinder while 2 numbers of cylinders each will be provided for packer plate, carrier plate and bin lifters.
- The high-pressure hoses will have working pressure of 270kg/cm.sq. testing pressure of 540 kg/cm.sq. PSI and bursting pressure of 675 kg/cm.sq. A pressure relief valve will have to be provided as built in control valve to safe guard the hydraulic circuit and to prevent excess loading of the equipment.
- All the pins used on the equipment will be of EN 8 ground and hard chrome plated.
- All the metallic pipes provided will be seamless and will be suitable to withstand the high pressure.
- The end connections, bends will be as per manufacturer standards, leak proof with latest technology connection systems.
- The packer plate will push the garbage inside the compactor body and the same will be compacted against the ejector plate. the compaction ratio achieved will be minimum 1:2. The packer plate will be of highly solid steel and strongly reinforced with lateral bearings arms for the attachment of the hydraulic rams. It will clear the hopper and initiate the primary compaction of the refuse at the time of its transportation into the refuse collection body. The complete packer cycle will take around 30 to 45 seconds.
- The carrier plates will slide on the shoe block which will reduce continuous abrasion to the tailgate.
- The hopper will be fixed in the refuse collection body by means of two floated hinges and will be supported by two hydraulic rams and two locking hooks mounted on the rear frame of the body.
- The tailgate with hopper will form the basic structure to which the functionary parts, slide plates and packer plates will be attached.

8. Bin Lifter

a) The bin lifter will be made from Corten (an alloy) or equivalent steel.
b) The length of bin lifter will be minimum 1.40 mtr
c) Two double acting hydraulic cylinders (one on each side) will be provided for lifting the bins.
d) The bin lifter will be suitable to lift the standard containers of size 1100 ltrs. (GI bins)
e) The bin lifter will contain a bin catcher made from hot deep high tensile steel/ corten steel.

A control panel will be installed at convenient position such that the working of hydraulic cylinder can be controlled safely.

9. Material for body

S.No	Description	Specification
1	Material	IS 2062 E 250
2	Roof Paneling	3 mm
3	Side Paneling	4 mm
4	Floor Thickness	6 mm
5	Rear cross Bar Thickness	6 mm

10. Material For Tailgate

1	Material	IS 2062 E 250
2	Side Paneling Thickness	4 mm
3	Rear side hopper Plate Thickness	5 mm
4	Hopper Bottom	6 mm
5	Superstructure member thickness	6 mm

11. Ejector System

1	Ejector Plate Materials	IS 2062 E 250
2	Pads	Aluminum Bronze

12. Hydraulic System

1	Power-take-off	Preferably vehicle manufactures
2	Hydraulic pump pressure	Min.140kg per CM Square
3	Packer plate hydraulic cylinder stroke	548 mm
4	Packer plate hydraulic internal diameter	100 diameters
5	Tailgate hydraulic cylinder internal diameter	70 diameters
6	Tailgate hydraulic cylinder stroke	726 mm
7	Bin-lifter cylinder internal diameter	80
8	Bin-lifter cylinder stroke	250 mm
9	Carrier plate cylinder internal diameter	110
10	Carrier plate cylinder stroke	670
11	Ejector cylinder	Telescopic type
12	Ejector cylinder number of stages	04
13	Ejector cylinder internal diameter	140
14	Ejector cylinder stroke	3455
15	Hydraulic valve	Reputable Vehicle Manufacture
16	Oil capacity	125 ltrs
17	Size of suction filter	140 microns
18	Size return line filter	10 microns

19	Size of Ejector Plate	920 X1740X2000
20	Cycle duration for Bin lifter	25 Seconds
21	Duration of Ejection	28 seconds
22	Pump and power take off mounting	Directly coupled without any intermediate shaft

13. Chassis: Make : Reputable Vehicle Manufacture
14. GVW : Minimum 16,200 Kg or Equivalent (19,200 Kg for 18 cum compactor)
15. Unladed kerb weight : Chassis 4500 – 6000 kg
16. Wheelbase : minimum 4350 mm
17. Engine : Minimum 180 HP, BS-VI
18. Transmission : 5 speed synchromesh gear box
19. Steering : Power steering
20. Tyres : 10.00 x 20- 16 PR, Front-2, rear-4, Spare-1(Lockable)
21. Cabin : Airconditioned and OEM standard.

24.6 Technical Specifications of Refuse Compactors (8 cum capacity)

The body will be mounted on the chassis with the help of runner and suitable "U" bolts & side support. The cross member shall be minimum size of 75X40X6mm in size

1. <u>Shell Body</u>

The Paneling of the body shall be as follows:

1. Material : 2062 IS specification.
2. Roof : 3 mm thickness
3. Sides : 4 mm thickness.
4. Flooring : 5 mm thickness.
5. Tailgate Resting Frame : 6 mm Thickness Box Section.

2. Tailgate

1. Side : 4mm IS 2062 Steel Specifications
2. Bottom of Hopper : 5mm IS 2062 Specification.
3. Sweep/Packer Blade thickness : 4 mm thickness.

3. Ejection

1. Ejector Plate : 3 mm IS 2062 Steel Specification
2. Pads : Bronze Pads.
3. Ejector Plate Shall be supported as well as guided on two square tubes located on both sides of the shell body
4. Smooth Sliding replaceable guider shoes made of high wear resistant bronze pads shall be used between plate and square tubes.

4. Bin Lifter System.

1. The bin lifter shall be made from 2062 Steel IS Specification.
2. Two double acting hydraulic cylinders (one on each side) shall be provided for lifting the bin.
3. The bin lifter shall be suitable to lift the standard containers of size 1100 liters.

4. The bin lifter shall contain a bin lifter arm.
5. The length of the bin lifter shall be minimum 1.4 mtrs. (Or suitable to tail gas & bin lifting operation)
6. Both arm types & comb lifting attachment to be provided.

5. Hydraulic System

The pump shall be directly coupled with power take off and shall develop sufficient pressure to operate the complete hydraulic system. The necessary valves shall be provided, so as to have the simultaneous operation of the system. Suitable hydraulic tank with Air breather cum filter shall be provided. The filter shall be provided at the inlet line and return line. A pressure relief valve shall have to be provided as built in control valve to safeguard the hydraulic circuit and to prevent excess loading of the equipment. All the pins used on the equipment shall be of EN 8 and hardened. All the metallic pipes shall be trivalent plated, will be seamless and shall be suitable to withstand the high pressure. The end connections, bends shall be as per manufacturer standards, leak proof with latest technology connection systems The tailgate with hopper shall form the basic structure to which the functionary parts, slide plates and packer plates shall be attached.

6. Technical Details

1	Power-take-off & Pump	Supplied by vehicle manufactures
2	Hydraulic pump pressure	Min. 140Kg per square cm.
3	Pump working speed	1200 RPM Approx.
4	Hydraulic cylinder	9 no double acting cylinders
5	Hydraulic valve	Reputed Manufacture make
6	Hydraulic tank capacity	Max 75 liters
7	Size of suction filter	140 microns
8	Size of return line filter	10 microns
9	Size of ejector plate	1000*1900*1530
10	Cycle duration for bin lifter	30 sec. min (at idle)
11	Duration of ejection	60 sec. min (at idle)

7. <u>Hydraulic Cylinder</u>

Cylinder	Bore in MM	Stroke in MM
Tailgate	63	405
Packer Plate	70	460
Slider Plate	80	685
Bin-lifter	80	250
Ejector	80	1565

8. Technical Specification

The following reputed makes of hydraulic equipment shall be fitted on the vehicle.

S.No	Components	Suppliers
1	Power-take-off & Pump	Vehicle Manufactures.
2	Hydraulic Cylinders	Reputed Manufacture make
3	Valves	Reputed Manufacture make
4	Hydraulic Hoses	Reputed Manufacture make

a) Chassis : TATA/ Ashok Leyland/Eicher/ Bharat Benz/ Mahindra
b) GVW : Minimum11000 Kg
c) Wheelbase : minimum 3900 mm
d) Engine : Minimum 120 HP, BS-IV models
e) Transmission : 5 speed synchromesh gear box
f) Steering : Power steering
g) Tyers : 8.25 x 20 - 16 PR, Front-2, rear-4, Spare-1(Lockable)

9. Other Extra Fitments

a) Two footsteps shall be provided, one each on left and right side at the rear.
b) Two hand bars, one on each side at the rear side shall be provided.
c) A level indicator shall be provided to indicate hydraulic oil level in the tank.
d) A Leachate collection tray with valve system for drainage on shell.
e) Reflector shall be provided on both side of the shell.
f) mud flap shall be provided for tires on both sides.
g) One footstep shall be provided in between driver cabin and shell for maintenance.
h) Purpose and hydraulic oil filling on tank.
i) PVC clamps shall be provided for metal hydraulic pipeline.

24.7 Technical Specifications of Tipper Truck (10 cum capacity with Stainless steel lining 4mm)

The vehicle shall be rugged and durable, shall incorporate the latest technological features offered by the manufacturer/ supplier and suitable to be used to load around 10 cum solid waste and unload it by tipping the load body or by suitable arrangement. The vehicle should have provision to transport the garbage in covered and packed condition. The equipment should confirm to the following specifications.

Specification	Wheelbase (mm)	3600
	Cabin	Day
	Load body capacity	10.5 cubic meter box
	Frame (mm)	275x75x7/8 bolted construction
	AdBlue	48 lts RH side
	Suspension	Semi elliptical leaf spring with 2 hydraulic shock absorbers front
	Front Overhang (mm)	1485
	Rear Overhang (mm)	1100
	Ground Clearance (mm)	265

Engine	Engine Model	H series
	Maximum Power, hp	200 @ 2400 rpm
	Maximum Torque, Nm	700
	No. of Cylinders, CC	6, 7200
	Emission Std	BS VI
Transmission	Gear Box Model & Type	FGR8.91/9.01, Mechanical, Synchromesh Gear
	Clutch Type	Single Dry Plate, Hydraulic Control
	Clutch Dia, Wear (mm)	380, 3.5mm
Axle	Front Axle	Reverse Elliot type
	Rear Axle	RAR: 6.17.1
	RAR	5,75
Body	Roof Paneling thickness	2,6 mm
	Side paneling thickness	3 mm
	Flooring thickness	6 mm
	Others	Cover while transportation and hinged tail gate openable
Break & Tyers	Service Break	Pneumatic Foot Operated, Duel line with ABS
	Parking Brake	Pneumatically operated hand control valves
	Front axle Brake	Ø 410 drum
	Rear Axle Brake	Ø 410 drum
Steering	Steering Type	Hydraulic power Assisted
Fuel tank & Electricals	Fuel tank (I)	220L
	Fuel tank (II)	Linked polymer on LH side
	Battery Capacity	120Ah (Std)
	Voltage	24V
Performance	Maximum Gradeability %	41,6
	Maximum Geared Speed	60kmph
	TCD	13.5m
Tyers (Size, Patter)	Type (Size)	Nylon Tyers (11x20)
Weight	Gross Vehicle Weight- GVW	18.500 kg
	Gross Combination Weight- GCW	-

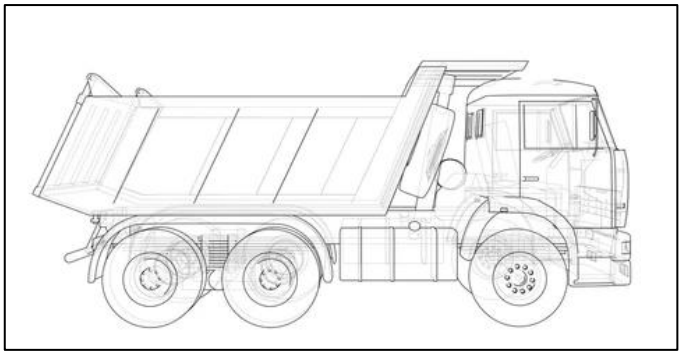

Figure 2:HMV Tipper Engineering drawing

24.8 Technical Specifications LMV[28]

- The vehicle should have provision to transport the garbage in covered and packed condition. The equipment should confirm to the following specifications.

Description	Specification
Weight (Kg)	
GVW	2805
Rated Payload	1500
Load Body Dimensions (mm)	
Length	2645
Width	1620
Height	380
Powertrain	
Engine Type	1.5 L-3 cylinder diesel engine (BSVI)
Displacement	1478
Max Power HP (@rpm)	80@3300
Max Torque Nm (@rpm)	190@1600-2400
Clutch	240 mm Diameter, Diaphragm, single Dry plate, Mechanical Cable Operated
Transmission	Fully Synchromesh, 5 speed gearbox Manual, Integrated Bell Housing
Fuel Tank Capacity	40 Liters
Emission Standard	BS VI
Suspension & Tyres	
Front Suspension	Rigid Suspension with Parabolic Leaf and Double acting Shock absorber
Rear Suspension	Semi Elliptical Leaf Spring with double acting Shock absorber
Tyre Size	195 R15 LT 8 PR

[28] Carcass Waste, DHW, hot spot, TNUHDB Area and priority service waste removal vehicles and for any other purpose.

Overall Dimensions (mm)	
Wheel Base	2510
Overall length	4630
Overall, Height	1900
Steering	
Steering System	Manual & Power Steering
Brakes	
Type	Vacuum Assisted Hydraulic brake with LSPV
Type of tipping	Power pack/PTO driven
Tipper Capacity	3.5 cum
Tipping angle	45 deg
Tipper Container Material	Mild Steel
Thickness of sheet	1.6mm/2 mm
Turning circle radius (mm)	5900 mm

24.9 Technical Specifications for Mechanical Sweeper.

1. Sweeping Mechanism:
   It shall be a Heavy-duty Suction Type Vacuum based International Make Truck Mounted Road Sweeper Machine.
2. Sweeping path/width:
   It shall not be less than 2300 mm in one single pass/ sweep with central main brush and the two side brushes.
3. Waste/ Dust Pick-Up Mechanism:
   The waste shall be picked up through a Heavy-duty Suction Type Vacuum based Mechanism only.
4. Sweeping Capability:
   The sweeping capability of the road sweeping machine shall be at least 20,000 square meters per hour.
5. Dust Control Technology:
   Water Sprays at Side Brushes, Central broom, Inside the Suction Nozzle & Hose.
6. Refuse Collection speed:
   The refuse collection system shall be equipped vacuum type suction-based system technology for an effective and complete collection of refuse while sweeping at speeds up to 0 to 10 km/hr and shall sweep maximum up-to 30 Km in a shift.
7. The machine shall be capable of collecting different types of refuse e.g., stones, sand, nails, bottles, leaves, sticks, papers, cloth, etc. without stopping the machine for manual collection.
8. A wander hose shall be provided with a minimum diameter of 200 mm to reach the inaccessible areas for cleaning by suction.
9. There shall be a washing system made up of PVC water tank having holding capacity of not less than 2000 liters.

10. Hopper/Waste container:

    The specifications of the hopper/waste container shall be as under:

    a) The volume of the debris container shall not be less than 6 cubic meters.
    b) The hopper shall be made of rust-resistant steel material.
    c) The hopper shall be equipped with a hydraulic system for dumping and closing doors.

11. Spare parts:

    Spare parts and consumables of the road sweeping machine must be available for at least seven years from the date of delivery.

12. Mechanical Power Sweeper Machine shall be fitted with thick brushes made up of steel/polypropylene and vacuum suction system, so that it is capable of picking up big size waste and variety of refuses like leaves, littering plastic paper/paper -dirt, dust, sand, rubble, silt, wet waste, bottles, small stones, human excreta, cow dung, floating matters, broken glass, pet bottles, coconut shells, bulky/huge accumulation of solid waste, etc. from the roads with speed & quality clearance, etc.

    The mechanical road sweeper shall confirm to the following technical specifications:

Technical Specification for Heavy Duty Sweeper (Truck Mounted Sweeper)		
Sl.No.	**Description**	**Minimum Desired Specification**
1	Sweeper Type	Heavy-duty Suction Type Vacuum based Truck Mounted Road Sweeper Machine
2	Make	International Make
3	Auxiliary Engine	Single engine
4	Engine rating	Minimum 80 HP
5	Dust Container Volume	Minimum 6 cubic meters
6	Dust Control Technology	By Water Sprays on Side & Main Brushes, Inside the Suction Mouth & Hose. It shall be PM 2.5 & PM 10 Certified.
7	Water Sprays/Sprinklers	The equipment shall have provision for at least 9 nos. of water sprays/ sprinklers on the central main brush and the two side brushes.
8	Water tank	Minimum 1500 liters capacity with cabin-controlled water pump.
9	Hopper & Water tank Material	Rust resistant Steel
10	Fuel Tank	Minimum 200 Ltr
11	Oil Tank	Minimum 50 Ltr
12	Sweeping speed & Travel Speed	Up to 0-10 Km/Hr & 80 Km/Hr
13	Vacuum Type Suction Based Mechanism	Collect all types of material with the help of Heavy Duty Vacuum Type Suction Based Mechanism
14	Brushes	Side Brush: at least 700 mm

		Main Broom: at least 400 mm Dia x 1500 mm Length
		Suction Hose: at least 250 mm
		Suction Nozzle: at least 600 mm
		Sweeping Width: at least 2300 mm
15	Vacuum System	Exhauster/ Impeller Fan Size shall be at least 700 mm with Variable Fan Speed up to 14000 m3/hr.
16	Hopper dumping height	Rear side dumping of minimum 1000 mm height
17	Hydraulic hopper dumping	Hydraulic opening and closing of the self-sealing rear door & Automatic Locking Device for the Titling Cylinder.
18	Construction parameter	The thickness of the Sheet to be used in the Dust Collection Tank and Water Tank shall be a minimum of 3 mm.
19	Tipping angle	55°
20	Wander hose	Minimum 200 mm diameter, 4 m long
21	Control system	All controls system shall be hydraulic & Pneumatic Actuated.
22	Electrical System	24 Volt
23	Control Panel	In-cab control, Infinitely variable rpm control for Suction Fan.
24	Gross Vehicle Weight	Up to 18500 kg
25	Chassis Engine Power	Minimum 175 HP
26	Chassis Emission Norms	BS VI & shall have (PM 2.5 & PM 10 filtration system)
27	Wheel Base	Minimum 4200 mm
28	Dumping height	1050 mm
29	Warranty	12 Months
30	Other Conditions	4 wheel drive, high dump of 2.4 meters. Hydraulic suspension

24.10 Technical Specifications for BOV Bins 80 L Capacity.

The indicative technical specification shall be:

Volume	80 Liters
Maximum recommended payload	45 Kgs
Raw materials	Virgin Injected High Density Polyethylene (HDPE)
Dimension	900 mm (H) * 360 mm width * 360 mm (depth)
Body type	CEN A (norm DIN)
- Space to be provided for introduction of a RFID - Certified ISO 9001, ISO 14001	

24.11 Technical Specification for Backhoe Loader

A. Engine

4, Cylinder, water Cooled, Diesel Engine

1) Displacement : 4.8 litres
2) Gross Power : 56 KW (76 mhp) @2200 RPM
3) Max Torque : 305 nm (31.1 kgm) @1100RPM

B. Transmission

IT Consists of a 4-speed, fully synchromesh smooth shift gear box with integral torque convertor and electrically operated reversing shuttle.

I. Easy to use, column mounted electric reversing shuttle switch can change machine direction while allowing operator to keep hand on the steering wheel leading to fast cycle time.

II. The pedals layout and conventional 4 pattern gear lever with transmission disconnect switch adds to the overall ease of operation. On the move gear changes are possible.

III. Torque converter stall ratio is 3.01:1.

C. Tyers

Front : 9.0 x 16 – 16PR

Rear : 16.9 x 28 – PR

D. Static Dimensions

1	Overall Length	m	5.90
2	Wheelbase	m	2.17
3	Slew center to rear axle center	m	1.32
4	Minimum ground clearance	m	0.36
5	Slew ground clearance	m	0.53
6	Height to top of cab	m	2.87
7	Overall height	m	3.61
8	Track width – Rear	m	1.73
9	Track Width – Front	m	1.86
10	Width over bucket	m	2.35

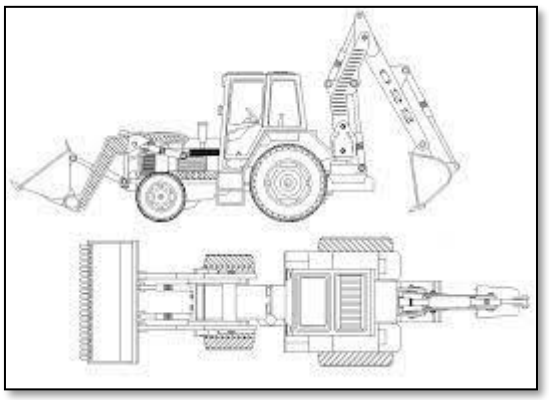

Figure 3: Backhoe loader engineering Drawing

E. Excavator Performance

1	Max. dig depth	m (ft-in)	4.77 (15-8)
2	Max. working height	m (ft-in)	5.97 (19-7)
3	Max. load over height	m (ft-in)	4.18 (13-9)
4	Bucket rotation – power	Deg	185
5	Dipper tear out force	Kgf	3.010
6	Standard bucket width	m (ft-in)	0.79 (2-7)

F. Turning Circle

Inner Wheels Braked	**3DX**
A*Outside loader bucket m(ft-in)	8.64 (28-4)
B Outside wheels m (ft-in)	6.20 (20-4)
Inner Wheels not braked	**3DX**
A*Outside loader bucket m (ft-in)	11.6 (38-1)
B Outside wheels m (ft-in)	9.94 (29-4)

G. Loader Performance

1	Dump Height	m (ft-in)	2.74 (8-12)
2	Load over height	m (ft-in)	3.32 (10-11)
3	Reach at ground	m (ft-in)	1.42 (4-8)
4	Max. reach at full height	m (ft-in)	1.15 (3-9)
5	Reach at full height – bucket dumped	m (ft-in)	0.78 (2-7)
6	Below ground level dig depth	m (ft-in)	0.07 (0-3)
7	Loader arm break out force	kgf	5.300

24.12 Technical Specification for Skid Steer Loader

A. <u>Engine</u>

Gross Power : 82 KW

Net Power : 79 KW

Displacement : 3.8 I

Stroke : 120 mm

Bore : 100 mm

Net Flywheel Power : 79 KW

Net Power : 80 KW

Peak Torque : 1,500 rpm

B. Operating Specifications[29]

Rated Operating Capacity : 1680 Kg
Tipping Load : 3365 Kg
Breakout Force -Tilt Cylinder : 3339 Kg
Breakout Force - Lift Cylinder : 2760 Kg
Rated Operating Capacity with optional counterweight : 1795 Kg
Operating weight : 4342 Kg

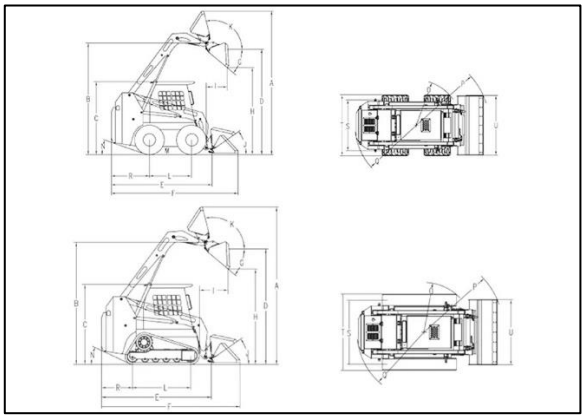

Figure 4:Skid steer loader Engineering drawing

C. Dimensions

Wheel Base : 1386 mm
Height – Top of Cab : 2133 mm
Vehicle Width over Tires : 1930 mm
Ground Clearance : 263 mm
Departure Angle : 28°
Maximum Dump Angle : 51°
Bumper Overhang – Behind Rear Axle : 1175 mm
Turning Radius from Centre – Machine Rear : 1899 mm
Length – Without Bucket : 3226 mm
Reach – Maximum Lift/Dump : 736 mm
Clearance at Maximum Lift and Dump : 2474 mm
Bucket Pin Height – Maximum Lift : 3265 mm
Bucket Pin Height – Carry position : 235 mm
Turning Radius from Centre – coupler : 1466 mm
Bucket Pin Reach – Maximum Lift : 344 mm
Rack Back Angle – Maximum Height : 84°
Maximum Overall Height : 4103 mm
Length – With Bucket on Ground : 3937 mm

[29] Note –Operating weight, Operating Specifications and dimensions all based field requirement, all fluids two speed, ride control, enclosed cab with glass door, side windows, air conditioning, air ride seat, advanced display, rearview camera, 1,000 CCA battery, dual direction self-level, 2036 mm low profile bucket, no optional counterweights, 14x 17.5 tires and manual quick coupler.

Maximum Reach – With arms Parallel to Ground : 1246 mm

Turning Radius from Center – Bucket : 2301 mm

Roll Back Angle : 28°

D. Hydraulic System

Standard Flow Mode – Loader Hydraulic Pressure : 23000 KPa

Standard Flow mode – Hydraulic Power- Calculated : 33 KW

Standard Flow Mode – Loader Hydraulic Flow : 86 l/min

Hydraulic Flow – XE – Maximum Loader Hydraulic Pressure : 28000 KPa

Hydraulic Flow – XE – Maximum Loader Hydraulic Flow : 150 l/min

Hydraulic Flow – XE – Hydraulic Power : 70 Kw

E. **CAB**

ROPS : ISO 3471:2008

FOPS : ISO 3449:2005 Level I

F. Power Train

Travel Speed – Forward or Reverse – One Speed : 11.6 Km/h

Travel Speed – Forward or Reverse – Two Speed : 16.6 Km/h

G. Service Refill Capacities

Cooling System : 16 I

Engine Crankcase : 13 I

Fuel Tank : 120 I

Hydraulic System : 55 I

Hydraulic Tank : 39 I

Chain Box – Each Side : 10.2 I

Diesel Exhaust Fluid (DEF) Tank : 19 I

H. **AIR Conditioning System (IF Equipped)**

AIR Conditioning: The air condition system on this machine contains the fluorinated greenhouse gas refrigerant R134a (Global Warming Potential = 1430). The system contains 0.81 kg of refrigerant which has a CO2 equivalent of 1.158 metric tons.

Noise Level

Outside Cab : 104 dB(A)

Inside Cab : 83 dB(A)

Note:
1) Cab and Rollover Protective Structures (ROPS) are Standard in north America and Europe.
2) The declared dynamic operator sound pressure level ISO 6396:2008. The measurement was conducted with the cab doors and windows closed and at 70% of the maximum engine cooling fan speed. The sound level may vary at different engine cooling speeds.

24.13 Technical Specification for Horticulture Vehicle (Pal finger with orange peel grabber).

Particular	Specification
Engine type	H series BS-VI – 6 cylinders, CRS with iGen-6 technology
Power/torque rating	200 HP @2400 rpm, 700 Nm @ 1200-2000 rpm

Clutch	380 mm dia – single dry plate, organic clutch with air assisted hydraulic booster
Gearbox type	6 speed synchromesh – 3 options/ 8 speed Synchromesh
Rear axle	Double Axle 8/4 Optional: Unitized Wheel bearing
Front axle	Forged I section – Reverse Elliot type, Optional: Unitized wheel bearings / Anti roll bar
Suspension options	Front: semi elliptic multi leaf. Optional: Parabolic springs Rear: Non – reactive suspension. Optional: Slipper ended suspension.
Chassis frame	HSS material with new improved design Dimensions: 275x75x7/8 mm bolted construction
Brakes	Full air dual line brakes with ABS and auto exhaust brake
Ad blue tank	48 Lts capacity on Rh side
Max speed	80 Kmph
Electricals	24V-120AH (150AH for AC Models)
Tyres	295/90R20 – 16 PR

20 CU Mtr open box Dumper Crane (Orange peel Bucket) Specification.

Type:	**20-53S**
X (mm)	1000
L (mm)	5350
O (mm)	280
K	49°
R (mm)	3045
T (mm)	130
Weight (kg)	2375
DS (mm)	1167
Min./max. container length (mm)	4400 – 6450
Loading (time)(s)	39
Unloading (time)(s)	49
Tipping (time)(s)	43
Fast unloading (time)(s)	19

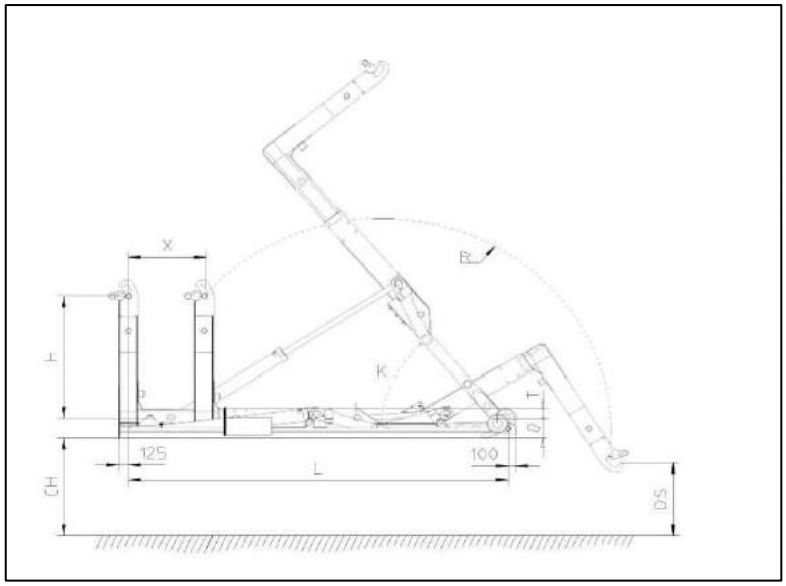

Figure 5:HOOK loader Engineering Drawing

Orange peel bucket Specification

Type of crane	: Knuckle Boom (Articulated)
Control	: Lever Control at ground level on both sides or on elevated above chassis stand on operations.
Lifting moment	:9.57 Ton-meter
Maximum Horizontal Outreach Hydraulically	:5.84 Meter
Maximum Vertical Reach Hydraulically	: 9.50 Meter
Number of Hydraulic Extern.	: One
Lifting Capacity (Horizontally).	:9750kg @ 1.0 meter; 1615 Kg @ 5.38 meter.
Stabilizers (In Built)	: 01 Pair Manual Operated
Crane Weight	:1080 kg
Dimension (BxHxS) in mm	:2480x2170x640

Technical Specification – Orange Peel Bucket

Number of tines	Volume	Max. Opening	Width (Closed)	Height (Closed ind. Rotator)	Self-Weight (w/o rotator)	Load Capacity	Closing Force
4	0.24	57	42.1	33	759	4400	2640

Technical Specification – 20 cum Open Box Dumper

Capacity : :20 m^3 approximately.

Measures :

Lateral length	: 6000 mm
External Width	: 2255 mm
Side Height	:1670 mm

- 6 mm plate on the floor.

- 3 mm plate on the sides.
- Rail beam in UPN 180.
- Reinforced Chassis with IPN 80 every 500 mm.
- Hook round F-114 of Ø 50.

24.14 Technical Specification for MCV vehicle

Specifications	
Engine	
Type	4 Cylinder, Common Rail, VGS Turbo Intercooled Diesel
Engine Displacement	1898 cm^3
Max Power	120Kw (163 hp) @377 rad/s (3600 rpm)
Max Torque	360 Nm @ 209 – 262 rad/s (2000-2500 rpm)
Transmission	
Drive Type	2WD System
No. of Speeds, Shift Type	6 Speed, Manual
Suspension	
Front	Independent Double Wishbone, Coil Spring
Rear	Soft Ride, Leaf Spring
Wheel	
Tyer Size	245/70 R16
Tyer Type	Radial, Tubeless
Rim Type	Steel
Brakes and Steering	
Front Brake Type	Ventilated Disc with Twin-pot Calipers
Rear Brake Type	Drum
Steering Type	Hydraulic Power Assist with Tilt Adjustment
Dimensions	
Overall Vehicle (L*W*H)	5295mm*1860mm*1785mm
Wheelbase	3095 mm
Deck (L*W*H)	1485mm*1530mm*465mm
Track Front /Rear	1570mm
Seating Capacity (Incl. Driver)	5
Weight	
Deck Carrying Capacity	225 Kg
Kerb Weight	1835 Kg

1. Anti- skid brake system (ABS) with electronic brakeforce distribution (EBD).
2. Emergency Brake Assist (EBA).
3. Brake override system (BOS).

4. Pre-Tensioners with load limiters for front seat belts.
5. ISOFIX anchorages for child seat
6. Rear Door child lock
7. Engine immobilizer.
8. Pedestrian friendly front fascia.
9. High tensile steel body with tailor – welded blanks.
10. Side Anti-intrusion bars
11. Chassis and cabin with crumple zones
12. Dual Front Airbags
13. Engine cover
14. Wheel cover
15. Warning lamps and buzzers
16. Rear de-fogger.

24.15 Technical Specification for Stationary Compactor.

Portable Compaction unit contains tipping device, which lifts up the waste and tips the waste into the compaction chamber. Hydraulically operated compaction unit results high compaction ratio. Fully filled unit can be taken up by a hook lifter for transport and emptying purpose.

Material Specification & Technical Data.

1.	**Body (Shell)**	
a.	Side	ST 52/IS 2062 E350 Grade sheet
b.	Roof	ST 52/IS 2062 E350 Grade sheet
c.	Flooring	ST 52/IS 2062 E350 Grade sheet
d.	Rails	I beam 175*85
e.	Flooring cross member	Pressed section
2.	**Head (Compaction chamber)**	
a.	Side	ST 52/IS 2062 E350 Grade sheet
b.	Flooring	8mm HARDOX/QUARD 450/400 GRADE SHEET
3.	**Ejector**	
a.	Front plate	ST 52/IS 2062 E350 Grade sheet
4.	Body shape	Square in shape with stiffeners on side & top to reduce to reduce material stress and avoid deformation due
5.	Body design	Taper in length wise for proper compaction
6.	Body volume in cum	20 cum
7.	System of bin loading	Front loading with Pine-Gear drive mechanism
8.	No. of hydraulic cylinders for bin-lifting	2 no.
9.	Compaction density t/cum	0.85
10.	Pressure (BAR)	180 – 240 BAR

11.	Power (KW)	7.5 KW
12.	Electric motor (V)	Roto motive – 3phase 415V AC, 50Hz
13.	Compaction force (Kn)	360 KN
14.	Total cycle time for crusher (sec)	Min 25 sec for forward and backward stroke
15.	Cycle time for tipping (sec)	Min 20-25 sec
16.	Tip cart capacity	2.2 cum
17.	Dimension of body (Tip cart in folded condition)	Approx. 6925(L)*2420(W)*2760(H)-overall
18.	Operating system	Hydraulic
19.	Oil tank capacity	90lit
20.	Availability of tray	Leachate tray available in front and back side and SS cam lock coupling provided in front side.
21.	Compaction mechanism	Scissor type Mechanism
22.	No. of hydraulic cylinders for scissor	2nos
23.	Sealing of rear door of compactor	Special square rubber gasket extending across the entire size of the rear door.
24.	Tail door locking	Special mechanism with heavy duty rachet lock and 55mm thk turn buckle lock profile provided
25.	Electrohydraulic operation method	PLC based
26.	Operation key(stop*&start), warning lights and emergency switch	Available
27.	The portable compactor shall be of front-loading type with hydraulically operated tip cart to receive waste from hand cart/tricycle van/auto tipper	It is possible to receive waste from hand cart/tricycle van/auto tipper
28.	Make of powerpack	Reputed
29.	Make of hydraulic cylinders	Reputed
30.	Equipment Weight	6200 Kg. Approx.

24.16 Technical Specification for Hook loader- for stationery compactor.

Hook Loaders shall be fabricated in accordance with machine regulations and shall ensure the safety of its operator and its surrounding environment.

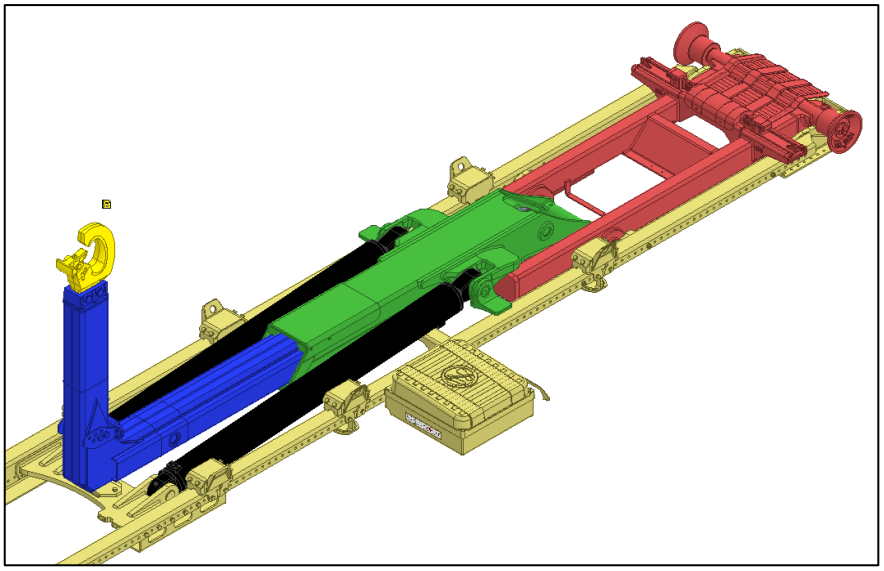

Figure 6:Hook Loader Engineering drawing.

Bottom Frame

The bottom frame comprises of.

1) Two longitudinal main runners and cross reinforcement
2) Pivot points of the tipping frame
3) Bottom frame with several container supports bracket divided over the full length of frame.
4) At the front of the frame cylinder mounting bridge
5) Material of Construction high grade Steel – S420, E450, S355

Tipping Frame:

The tipping frame enables the system to tip the containers. Consist of

1) The tipping frame rotating hinge at the rear of the system's bottom frame.
2) Casted rollers for container support and Roll-on & Roll-off the Containers.
3) Locking device to lock the main off-loading frame with Tipping frame.
4) Material of Construction HI grade Steel – S420, E450, S355, GJS-500-7

Off – loading frame:

The off-loading frame consist of.

1) Hook mast, which slides front and backwards.
2) Off-loading frame rotating hinge in the middle of the main frame.
3) Two double acting main cylinders rotate the off-loading frame to roll-off the container
4) Material of Construction HI grade Steel – S650, S600, EN10025-3 S460N/SAE8620

Hook Mast:

1) The hook mast can move front – and backwards inside the off-loading frame.
2) By this the system is able to transport different various length of container.
3) The hook mast will also unlock the off-loading frame from the tipping frame.
4) It enables the system to roll – off the container.
5) The high strength cast hook mounted into the hook mast
6) Hook Mast has been placed at a height of 1570 mm.

7) Material of Construction HI grade Steel – EN10293 G20Mn5+N, S650, S600.

Hydraulic system:

1) Main Cylinders for Tipping, Loading and Offloading: -Heavy duty cylinders made up off high grade steel with hard chrome plated piston rod capable to withstand high pressure 350 Bar with Halite and Parker seal and ring.
2) Heavy duty sliding cylinder to adjust the container length made up of high-grade steel with hard chrome piston rod to with stand high pressure 315 Bar with Haliite and Parker seal and ring.
3) Hydraulic combi-lock suitable for locking of containers from inside or outside to the safety of containers while transportation made up of high-grade steel.
4) Directional control valve: -Directional control valve with different section for different operation is with pneumatic and manual activation, set at maximum pressure of 300 bar with additional port relief valve on different section. Pneumatic activation is operated from inside the cabin.
5) Bent axial piston pump suitable for continuous high-pressure requirement (350 Bar) to operate the complete hydraulic system.

Description	Specification
Loading Time (s)	36
Unloading Time (s)	46
Tipping Time (s)	41
Fast Unloading Time (s)	14
Supplied Pump (l/min)	84
Flow (l/min)	100
Engine type	H series BS-VI – 6 cylinders, CRS with iGen-6 technology
Power/torque rating	200 HP @2400 rpm, 700 Nm @ 1200-2000 rpm
Clutch	380 mm dia – single dry plate, organic clutch with air assisted hydraulic booster
Gearbox type	6 speed synchromesh – 3 options/ 8 speed Synchromesh
Rear axle	Fully floating multi axle both live axle .
Front axle	– Reverse Elliot type, Optional: Unitized wheel bearings / Anti roll bar
Suspension options	Front: semi elliptic multi leaf. Optional: Parabolic springs Rear: Non – reactive suspension. Optional: Slipper ended suspension.
Chassis frame	HSS material with new improved design Dimensions: 275x75x7/8 mm bolted construction

25 Schedule 26: Key Performance Indicators, Monitoring & Evaluation, Penalty & Payment Calculations

25.1 Key Performance Indicators

(a) The table below details the apportionment of cost into the various project operation components (to be termed as "Value Chain Components")

Table 2: Weightages of Value Chain Components

Sl. No.	Component	Weightage (%)
1	Primary Collection	26
2	Street Sweeping & Silt Collection	26
3	Secondary Collection & Transportation	24
4	Management Information System (MIS)	3
5	Complaint Redressal	12
6	Compliances including Disaster Management	5
7	IEC Activities	4
Total		100

(b) For each of the above Value Chain Component, KPIs are being formulated and sub-weightages have assigned to them as per criticality of operation. An example is enumerated in the table below:

Table 3: Example - Weightage Calculation for KPIs

Sl. No.	Component	Weightage (W)	Key Performance Indicators	Criticality of Operation Value (C)	Sub weightage Calculation (%) C/W*100
1	Street Sweeping & Collection	26	Collection of solid waste mixed with silt along Canal/ Riverbanks from pre-designated locations	7	7/ 26 *100 = 26.92 %
2			Minimum required deployment of Manpower	7	7/ 26 *100 = 26.92 %
3			Minimum required Deployment of Small/Big Mechanical Street Sweeper	7	7/ 26 *100 = 26.92 %
4			Minimum required deployment of wheeled bins & other equipment as per MIOP	3	3/ 26 *100 = 11.54 %
5			Timely Manual Street Sweeping on daily basis	2	2/ 26 *100 = 7.69 %
6	**Total**			26	100 %

(c) The following table provides the total number of KPIs for Value Chain Components and their respective sub weightages along with timelines, evaluation parameters and penalty mechanism.

Table 4: Key Performance Indicators

Sl. No.	Component		Timeline	Weightage (As per proportion of O&M costs)	Sub Sl. No.	Key Performance Indicators (KPIs)	Core (1)/ non-core (0) Activity	Parameter for Evaluation	Weightage (As per criticality of operation) W_{CO}	Sub Weightage (As per criticality of operation)	Assigned Target (A) From COD (months)	Tolerance Level (T)	Actual Performance (P)	Performance Slabs & Penalty	Penalty (F) calculation per day Example of Slab I
1	**LoI - CA Signing**		**0-30**	NA	1	Signing of CA	1		NA	NA	NA	NA		Bid Security forfeiture	NA
2	**Development Phase**		**31-95**	NA	2	Submission of Draft MIOP	1		NA	NA	NA	NA		**After 45 days from signing of CA: Rupees 30000 per day[30]**	NA
3	**Procurement Phase**		**31-60**	NA	3.1	Placement of Order of at least 80% of the Minimum Required Infrastructure (Movable Assets)	1	Submission of Financial Closure document & Purchase Order	NA	NA	NA	NA		**After 75 days from signing of CA: Rupees 40000 per day**	NA
4	**Transition Phase**	**Takeover period**	**120-210**	NA	4.1	1) Takeover by Concessionaire as per Takeover Plan of Approved MIOP 2)Simultaneous deployment of Infrastructure & Manpower	1	Taking Over Note to be jointly signed by parties.	NA	NA	NA	NA		**After 107 days from signing of CA: (IAQ/365) * 2 per day[31]**	NA NA
		Achievement of COD	**230**	NA	4.2	Compliance as per definition of COD as specified in Vol II A	1	Issuance of COD Certificate	NA	NA	NA	NA		**After 200 days from signing of CA: (IAQ/365) * 2 per day[32]**	
5	**Operation & Maintenance Phase**	**Primary Collection**	**231-3650**	26	5.1	Minimum required deployment of Manpower for Primary Collection and Litter Free Corridor as per Approved MIOP.	1	Numbers	5	19.23	Months 01- 06: 100 % Months 07- 120: 100 %	Months 01- 06: 10 % Months 07- 120: 5%		**Slab I: 0 % < (A-T-P) <= 10 % :5 %** **Slab II :10% < (A-T-P) <= 20 % :10 %** **Slab III: 20% <(A-T-P) <=50 % :20 %** **Slab IV: 50% <(A-T-P) <=75 %: 45 %** **Slab V: 75% <(A-T-P) <=100 % :100 %**	F= 5 % of 19.23 % of 26 % of 50% 0f (IMQ)/30
					5.2	Required deployment of BOVs for Primary Collection and Litter Free Corridor as per Approved MIOP	1	Numbers	5	19.23	Months 01- 06: 100 % Months 07- 120: 100 %	Months 01- 06: 10 % Months 07- 120: 5%			F= 5 % of 19.23 % of 26 % of 50% 0f (IMQ)/30
					5.3	(a) 100 % Coverage of Households excluding TNUHDB area.	1	Numbers	3	11.54	Months 01- 06: 100 % Months 07- 120: 100 %	Months 01- 06: 10 % Months 07- 120: 0 %			F= 5% of 11.54 % of 26 % of 50% 0f (IMQ)/30
						(b) Timely Collection of Solid Waste from TNUHDB Area	1	Numbers	2	7.70	Months 01- 06: 100 % Months 07- 120: 100 %	Months 01- 06: 10 % Months 07- 120: 5%			F= 5% of 7.70 % of 26 % of 50% 0f (IMQ)/30
					5.4	Collection of solid waste from Market Areas	1	Frequency	3	11.54	Months 01- 06: 100 % Months 07- 120: 100 %	Months 01- 06: 10 % Months 07- 120: 5%			F= 5% of 11.54 % of 26 % of 50% 0f (IMQ)/30
					5.5	Supplying segregated minimum guaranteed solid waste to decentralized processing units as per MIOP	1	quantity & quality as per Schedule 6 of Vol II B of this RFP	4	15.38	Months 01- 120: 100 %	Months 01- 120: 10 %			F= 5% of 15.38 % of 26 % of 50% 0f (IMQ)/30
					5.6	Collection of Horticultural waste from Parks & Roadsides.	0	Frequency	1	3.85	Months 01- 06: 100 % Months 07- 120: 100 %	Months 01- 06: 10 % Months 07- 120: 5%			F= 5 % of 3.85 % of 26 % of 50% 0f (IMQ)/30
					5.7	Collection & Deposition of Domestic Hazardous waste at assigned DHW Deposit Center	0	Minimum Twice a week	1	3.85	Months 01- 06: 100 % Months 07- 120: 100 %	Months 01- 06: 10 % Months 07- 120: 5%			F= 5 % of 3.85 % of 26 % of 50% 0f (IMQ)/30

[30] The Authority shall waive off this penalty subject to (i) delay in submission/ handing over of required data, information, land parcels, existing BOV parking stations, existing Transfer Stations and (ii) delay in obtaining applicable consents & clearances.
[31] The Authority shall waive off this penalty subject to (i) delay due to public resistance (ii) unrest (iii) delay in delivery of procured infrastructure due to reasons not attributable to the Concessionaire or any reason thereof.
[32] The Authority shall waive off this penalty subject to reasons not attributable to the Concessionaire or any reason thereof.

Sl. No.	Component		Timeline	Weightage (As per proportion of O&M costs)	Sub Sl. No.	Key Performance Indicators (KPIs)	Core (1)/ non-core (0) Activity	Parameter for Evaluation	Weightage (As per criticality of operation) W_{CO}	Sub Weightage (As per criticality of operation)	Assigned Target (A) From COD (months)	Tolerance Level (T)	Actual Performance (P)	Performance Slabs & Penalty	Penalty (F) calculation per day Example of Slab I
					5.8	Provisioning of Separate Functional Bins in BoVs for segregated solid waste deposition	0	Numbers	1	3.85	Months 01- 06: 100 % Months 07- 120: 100 %	Months 01- 06: 10 % Months 07- 120: 5%			F= 5 % of 3.85 % of 26 % of 50% 0f (IMQ)/30
					5.9	Installation of Signage Boards on Streets and establish vantage points	0	Numbers	1	3.85	Months 01- 06: 100 % Months 07- 120: 100 %	Months 01- 06: 10 % Months 07- 120: 5%			F= 5 % of 3.85 % of 26 % of 50% 0f (IMQ)/30
6		**Street Sweeping & Collection**		**26**	6.1	(a) Timely street sweeping on daily basis - Manual	1	Frequency/ Numbers	3.5	13.46	Months 01- 06: 100 % Months 07- 120: 100 %	Months 01- 06: 10 % Months 07- 120: 5%		**Slab I: 0 % < (A-T-P) <= 10 % :5 %** **Slab II: 10% < (A-T-P) <= 20 % :10 %** **Slab III: 20% <(A-T-P) <=50 % :20 %** **Slab IV: 50% <(A-T-P) <=75 %: 45 %** **Slab V: 75% <(A-T-P) <=100 % :100 %**	F= 5 % of 13.46 % of 26 % of 50% 0f (IMQ)/30
						(b) Timely street sweeping on daily basis – Mechanical	1	Frequency/ Numbers	3.5	13.46	Months 01- 06: 100 % Months 07- 120: 100 %	Months 01- 06: 10 % Months 07- 120: 5%			F= 5 % of 13.46 % of 26 % of 50% 0f (IMQ)/30
					6.2	Minimum required deployment of Manpower	1	Numbers	**7**	26.92	Months 01- 06: 100 % Months 07- 120: 100 %	Months 01- 06: 10 % Months 07- 120: 5%			F= 5 % of 26.92 % of 26 % of 50% 0f (IMQ)/30
					6.3	(a) Required Deployment of Small/Big Mechanical Street Sweeper as per Approved MIOP	1	Numbers	5	19.23	Months 01- 06: 100 % Months 07- 120: 100 %	Months 01- 06: 10 % Months 07- 120: 5%			F= 5 % of 19.23 % of 26 % of 50% 0f (IMQ)/30
						(b) Required Deployment of other vehicles as per Approved MIOP	0	Numbers	2	7.69	Months 01- 06: 100 % Months 07- 120: 100 %	Months 01- 06: 10 % Months 07- 120: 5%			F= 5 % of 7.69 % of 26 % of 50% 0f (IMQ)/30
					6.4	Required deployment of wheeled bins & other equipment as per Approved MIOP	1	Numbers	3	11.54	Months 01- 06: 100 % Months 07- 120: 100 %	Months 01- 06: 10 % Months 07- 120: 5%			F= 5 % of 11.54 % of 26 % of 50% 0f (IMQ)/30
					6.5	Collection of solid waste mixed with silt along Canal/ Riverbanks from pre-designated locations	0	Frequency/ Numbers	2	7.69	Months 01- 06: 100 % Months 07- 120: 100 %	Months 01- 06: 10 % Months 07- 120: 5%			F= 5 % of 7.69 % of 26 % of 50% 0f (IMQ)/30
7		**Secondary Collection & Transportation**		**24**	7.1	(a) Clearing of bins as per MIOP subject to the condition that no bins are overflowing	1	Frequency/ Numbers	4	16.67	Months 01- 06: 100 % Months 07- 120: 100 %	Months 01- 06: 10 % Months 07- 120: 5%		**Slab I: 0 % < (A-T-P) <= 10 % :5 %** **Slab II: 10% < (A-T-P) <= 20 %: 10 %** **Slab III: 20% <(A-T-P) <=50 %: 20 %** **Slab IV: 50% <(A-T-P) <=75 %: 45 %** **Slab V :75% <(A-T-P) <=100 %: 100 %**	F= 5 % of 16.67 % of 24 % of 50% 0f (IMQ)/30
						(b) Disinfection of Bins as per MIOP	1	Frequency/ Numbers	1	4.17	Months 01- 06: 100 % Months 07- 120: 100 %	Months 01- 06: 10 % Months 07- 120: 5%			F= 5 % of 4.17 % of 24 % of 50% 0f (IMQ)/30
					7.2	Transportation of segregated waste via required deployment of functional vehicles as per approved MIOP	1	Numbers	2	8.33	Months 01- 06: 100 % Months 07- 120: 100 %	Months 01- 06: 10 % Months 07- 120: 5%			F= 5 % of 8.33 % of 24 % of 50% 0f (IMQ)/30
					7.3	Minimum required deployment of manpower	1	Numbers	2	8.33	Months 01- 06: 100 % Months 07- 120: 100 %	Months 01- 06: 10 % Months 07- 120: 5%			F= 5 % of 8.33 % of 24 % of 50% 0f (IMQ)/30
					7.4	Designated number of functional closed bins- in specified colour-for wet solid waste, dry solid waste, street sweeping solid waste, silt, etc. as per MIOP	1	Numbers	1	4.17	Months 01- 06: 100 % Months 07- 120: 100 %	Months 01- 06: 10 % Months 07- 120: 5%			F= 5 % of 4.17 % of 24 % of 50% 0f (IMQ)/30
					7.5	Bin replacement (Broken/Stolen) within 24 hours	0	Numbers	2	8.33	Months 01- 06: 100 % Months 07- 120: 100 %	Months 01- 06: 10 % Months 07- 120: 5%			F= 5 % of 8.33 % of 24 % of 50% 0f (IMQ)/30
					7.6	Bin washing as per MIOP	0	Frequency/ Numbers	1	4.17	Months 01- 06: 100 % Months 07- 120: 100 %	Months 01- 06: 10 % Months 07- 120: 5%			F= 5 % of 4.17 % of 24 % of 50% 0f (IMQ)/30
					7.7	Provisioning of Top Cover for Secondary C&T vehicles	0	Numbers	1	4.17	Months 01- 06: 100 % Months 07- 120: 100 %	Months 01- 06: 10 % Months 07- 120: 5%			F= 5 % of 4.17 % of 24 % of 50% 0f (IMQ)/30
					7.8	O&M of Static Compactors as per MIOP	1	Frequency	4	16.67	Months 01- 06: 100 % Months 07- 120: 100 %	Months 01- 06: 10 % Months 07- 120: 5%			F= 5 % of 16.67 % of 24 % of 50% 0f (IMQ)/30

Sl. No.	Component	Timeline	Weightage (As per proportion of O&M costs)	Sub Sl. No.	Key Performance Indicators (KPIs)	Core (1)/ non-core (0) Activity	Parameter for Evaluation	Weightage (As per criticality of operation) W_{CO}	Sub Weightage (As per criticality of operation)	Assigned Target (A) From COD (months)	Tolerance Level (T)	Actual Performance (P)	Performance Slabs & Penalty	Penalty (F) calculation per day Example of Slab I
				7.9	(a) Supplying segregated minimum guaranteed solid waste to operational centralized processing facility	1	quantity & quality (density) as per Schedule 6 of Vol II B of CA	4	16.67	Months 01- 120: 100 %	Months 01- 120: 10 %			F= 5 % of 16.67 % of 24 % of 50% 0f (IMQ)/30
					(b) Disposal of remaining collected solid waste and rejected consignments from centralised and decentralised processing facilities to Dumpsite/ SLF	1	quantity as per Schedule 6 of Vol II B of CA	2	8.33	Months 01- 120: 100 %	Months 01- 120: 10 %			F= 5 % of 8.33 % of 24 % of 50% 0f (IMQ)/30
8	**MIS**		3	8.1	Submission of Reports with periodicity & format as prescribed in MIOP and/ or requested by IE/ Authority	1	Numbers	1.5	50.00	Months 01- 06: 100 % Months 07- 120: 100 %	Months 01- 06: 10 % Months 07- 120: 5%		**Slab I: 0 % < (A-T-P) <= 10 %: 5 %** **Slab II: 10% < (A-T-P) <= 20 %: 10 %** **Slab III: 20% <(A-T-P) <=50 %: 20 %** **Slab IV: 50% <(A-T-P) <=75 %: 45 %** **Slab V: 75% <(A-T-P) <=100 %:100 %**	F= 5 % of 50 % of 3 % of 50% 0f (IMQ)/30
				8.2	(a) Provision of minimum required Manpower	0	Numbers	0.75	25.00	Months 01- 06: 100 % Months 07- 120: 100 %	Months 01- 06: 10 % Months 07- 120: 5%			F= 5 % of 25 % of 3 % of 50% 0f (IMQ)/30
					(b) Provision of minimum required Infrastructure	0	Numbers	0.75	25.00	Months 01- 06: 100 % Months 07- 120: 100 %	Months 01- 06: 10 % Months 07- 120: 5%			F= 5 % of 25 % of 3 % of 50% 0f (IMQ)/30
9	**Complaint Redressal**		12	9.1	Redressal of all complaints within 6 hours except 9.2	1	Numbers	6	50.00	Months 01- 06: 100 % Months 07- 120: 100 %	Months 01- 06: 10 % Months 07- 120: 5%		**Slab I: 0 % < (A-T-P) <= 10 %: 5 %** **Slab II: 10% < (A-T-P) <= 20 %: 10 %** **Slab III: 20% <(A-T-P) <=50 %: 20 %** **Slab IV: 50% <(A-T-P) <=75 %: 45 %** **Slab V: 75% <(A-T-P) <=100 %: 100 %**	F= 5 % of 50 % of 12 % of 50% 0f (IMQ)/30
				9.2	Redressal of complaints for Replacement/ Retro-fitment/ Repairing of Assets within 24 hours	1	Numbers	4	33.33	Months 01- 06: 100 % Months 07- 120: 100 %	Months 01- 06: 10 % Months 07- 120: 5%			F= 5 % of 33.33 % of 12 % of 50% 0f (IMQ)/30
				9.3	Functional 24*7 Call Centre (IVRS)	1	Number of Complaints Addressed Successfully	2	16.67	Months 01- 06: 100 % Months 07- 120: 100 %	Months 01- 06: 10 % Months 07- 120: 5%			F= 5% of 16.67 % of 12 % of 50% 0f (IMQ)/30
10	**Compliances**		5	10.1	Legal compliances	1	Certification	1.5	30.00	Months 01- 120: 100 %	Months 01- 120: 0 %		**Slab I:0 % < (A-T-P) <= 10 %: 5 %** **Slab II: 10% < (A-T-P) <= 20 %: 10 %** **Slab III: 20% <(A-T-P) <=50 %: 20 %** **Slab IV: 50% <(A-T-P) <=75 %: 45 %** **Slab V: 75% <(A-T-P) <=100 %: 100 %**	F= 5 % of 30 % of 5 % of 50% 0f (IMQ)/30
				10.2	(a) EHS Compliances – PPE for Manpower	1	Visual Inspection & Sampling	0.75	15.00	Months 01- 120: 100 %	Months 01- 120: 0 %			F= 5 % of 15 % of 5 % of 50% 0f (IMQ)/30
					(b) EHS Compliances – PPE for Manpower	1	Visual Inspection & Sampling	0.75	15.00	Months 01- 120: 100 %	Months 01- 120: 0 %			F= 5 % of 15 % of 5 % of 50% 0f (IMQ)/30
				10.3	Non- mixing of C&D waste/ Horticultural waste/Biomedical waste/ hazardous waste Drain Silt with solid waste	1	Visual Inspection & Sampling	1	20.00	Months 01- 06: 100 % Months 07- 120: 100 %	Months 01- 06: 10 % Months 07- 120: 0%			F= 5 % of 20 % of 5 % of 50% 0f (IMQ)/30
				10.4	Regular inspections of Workshop, Server Room & Complaint Redressal System	0	Certification	1	20.00	Months 01- 06: 100 % Months 07- 120: 100 %	Months 01- 06: 10 % Months 07- 120: 5%			F= 5 % of 20 % of 5 % of 50% 0f (IMQ)/30
11	**IEC Activities**		4	11.1	Conducting Information, Education and Communication Activities as per Schedule 12 & MIOP	1	Numbers	1.5	37.50	Months 01- 06: 100 % Months 07- 120: 100 %	Months 01- 06: 10 % Months 07- 120: 5%		**Slab I:0 % < (A-T-P) <= 10 % : 5 %** **Slab II:10% < (A-T-P) <= 20 % : 10 %** **Slab III: 20% <(A-T-P) <=50 % : 20 %** **Slab IV: 50% <(A-T-P) <=75 % : 45 %** **Slab V : 75% <(A-T-P) <=100 % :100 %**	F= 5 % of 37.50 % of 4 % of 50% 0f (IMQ)/30
				11.2	Coverage of Door-to-Door Campaigns as per MIOP	1	Numbers	1.5	37.50	Months 01- 06: 100 % Months 07- 120: 100 %	Months 01- 06: 10 % Months 07- 120: 5%			F= 5 % of 37.50 % of 4 % of 50% 0f (IMQ)/30

Sl. No.	Component	Timeline	Weightage (As per proportion of O&M costs)	Sub Sl. No.	Key Performance Indicators (KPIs)	Core (1)/ non-core (0) Activity	Parameter for Evaluation	Weightage (As per criticality of operation) W_{CO}	Sub Weightage (As per criticality of operation)	Assigned Target (A) From COD (months)	Tolerance Level (T)	Actual Performance (P)	Performance Slabs & Penalty	Penalty (F) calculation per day Example of Slab I
				11.3	Achieving segregation up to 90 % at HH level in 36 months and maintenance of 90 % thereafter***	1	Numbers	1	25.00	Zone No. …….– Existing Segregation Level: x % Month 1 = x % + y % Month 2 = x % + 2y % Month 3 = x % + 3y % Till Month 12 = x % +12y % *Where y = (100-x)/36* Months -37- 120: 100%	Months 01- 36: 10 % of the Assigned Target Months 37 - 120: 10 %			F= 5 % of 25 % of 4 % of 50% 0f (IMQ)/30
Total			100					100						
12	**Disaster Management**		NA	13.1	Adequate allocation of manpower & infrastructure as per MIOP including hired resources.		As per MIOP						**Rupees 25000 per day**	
			NA	13.2	Performance during disasters as per approved plan.		As per MIOP						**40% of daily payment**	

25.2 Penalty Computation and Payment

1) For the Development and Procurement Phases, no weightages or tolerance levels have been assigned. The penalties imposed for these phases are lump sum in nature (Refer Table No. 3)

2) For the Transition Phase, the penalty per day shall be (IAQ/365) *2.

3) The O&M Phase has been divided into one to two time periods against which different targets and tolerance levels have been assigned for all the KPIs as shown in the table below (except for KPI nos. 5.3(a), 5.5, 7.9 (a & b), 10.1, 10.2 and 11.3 in Table 3:

Sl. No.	Time Period(Months)	Tolerance Levels
1	0-6	10 %
2	7-120	5 %

4) Formula for Monthly Penalty = $R*W_{CO}*PP$

Where:

R= Penalty Rate as per Penalty Slabs specified in Table 4 of Schedule 26

W_{CO} (Weightage as per criticality of operation) = $W_{KPI}*W_{Comp}$

W_{KPI} = Sub-weightage of KPI

W_C = Weightage of Component

PP = Performance based Payment (Monthly)

5) For all the KPIs and their different time periods, five levels of penalty slabs have been created as seen in table 3 with higher penalty charges for higher penalty slabs.

6) In case of consistently high deficiency levels, the surcharge on penalty would be implemented as specified in sub-Article 8.7 of Vol II A.

7) **Example:** Calculating Monthly Payment: An Example for the Time Period 5-96 months

i. Let us assume that the Initial Annual Quote (IAQ) of the Concessionaire is Rupees 1,20,000.

ii. So, the Initial Monthly Quote (IMQ) of the Concessionaire is Rupees 10,000 (IAQ/ 12).

iii. Thus, the Fixed Payment portion is Rupees 5,000 (50% of IMQ) and the Performance based Payment (PP) is Rupees 5,000 (50% of IMQ).

iv. The following table illustrates penalty calculation for some specific KPIs for the time period Months 7-120 after COD.

v. It has been further assumed that for the remaining KPIs, there is no deficiency in performance and TAF is not applicable.

Table 5: Example-Penalty Calculation

Sl. No.	Component	Key Performance Indicators	Assigned Target (A %)	Tolerance Level (T%)	Actual Performance (P%)	Deficiency (D %) = A-T-P	Penalty Calculation (INR)
1	Primary Collection	Minimum required deployment of Manpower	100	5	90	5	12.50
2	Street Sweeping & Collection	Timely Street sweeping on daily basis	100	5	75	20	35
3	Secondary Collection & Transportation	Transportation of segregated waste via required deployment of functional vehicles as per approved MIOP	100	5	85	10	5
4	Management Information System (MIS)	Provision of minimum required Manpower & Infrastructure	100	5	80	15	7.5
5	Complaint Redressal	Redressal of complaints for Replacement/ Retro-fitment/ Repairing of Assets within 24 hours	100	5	75	20	20
6	Compliances	Non- mixing of C&D waste/ Horticultural waste/Biomedical waste/ hazardous waste/ Drain Silt with solid waste	100	5	90	5	2.5
7	IEC Activities	Conducting Information, Education and Communication Activities as per Schedule 12 & MIOP	100	5	55	40	15

The Total Monthly payment to be made to the Concessionaire is illustrated through the following table below:

Table 6: Monthly Payment

Sl. No.	Component	Value (Rupees)
1	Fixed Payment	**5,000.00**
2	Performance based Payment	5,000.00
3	Total Monthly Penalty	97.50
4	Actual Performance based payment	**4902.50**
5	Transport Adjustment Factor - NA	**0.00**
6	Total Monthly Payment	**9902.50**

25.3 Finalization of Evaluation Mechanism of KPIs during from takevoer period to COD

During this period, the Concessionaire shall in coordination with the IE and Authority shall complete the following:

(i) IT Integration for all applicable Project components.

(ii) Trial Run of the KPIs and finetuning of the methodology for evaluation & monitoring KPIs as well as penalty and payment calculations

(iii) Finalization & Approval of Standard Operating Procedures (SOP) handbook for KPI monitoring and evaluation

(iv) Stabilization and completion of MIS generation

25.4 Evaluation Mechanism during O&M Phase (post COD)

1) The evaluation of the performance of the Concessionaire during the O&M Phase based on KPIs shall be done by the Independent Engineer (IE) as per the monitoring schedule throughout the Concession Period/ O&M Phase.

2) The IE shall calculate and maintain records of the daily performance of the Concessionaire (Daily Performance Report-DPR) both online & offline (hard and soft copies) which shall be accessible to both the Authority and the Concessionaire.

3) The IE shall compile and aggregate the DPRs of the Concessionaire into a Monthly Performance Report (MPR) and based on the data compiled IE shall calculate the monthly penalty and shall compute the payment due to the Concessionaire. The MPR both online & offline (hard and soft copies) shall be accessible to both the Authority and the Concessionaire

4) The abstracts of the DPRs and MPRs shall be uploaded on the MIS system.

5) It is clarified that the data capturing of evaluation parameters for the KPIs has been divided into three broad typology based on their mode of evaluation:

   i) *Automatic Verification* (Real Time) based on MIS, GPS, RFID. Geofenced and Internet of Things (IoT) devices

   ii) *Manual Verification* to be implemented by a team of Monitoring Supervisors (MS) reporting to the IE

   iii) Combination of Photographic and Manual Verification i.e. *Hybrid verification.*

6) The Template for the KPI- SOP (standard Operating Procedure) handbook shall[33] be as follows:

<table>
<tr><td colspan="12">Name of the Key Performance Indicator</td></tr>
<tr><td>Component</td><td colspan="2"></td><td>Evaluation Formula</td><td colspan="8"></td></tr>
<tr><td>Weightage</td><td colspan="2"></td><td rowspan="2">Evaluation Process</td><td colspan="8" rowspan="2"></td></tr>
<tr><td>Evaluation Mode</td><td colspan="2"></td></tr>
<tr><td>Tolerance Level</td><td colspan="2"></td><td rowspan="2">Evaluation Back-up</td><td colspan="8" rowspan="2"></td></tr>
<tr><td>KPI Type</td><td colspan="2"></td></tr>
<tr><td>Evaluation Frequency</td><td colspan="2"></td><td>Time Cutoff for Evaluation</td><td colspan="8"></td></tr>
<tr><td rowspan="4">Critical Number (Denominator)</td><td colspan="2" rowspan="4"></td><td rowspan="4">KPI Waiver</td><td colspan="8"></td></tr>
<tr><td colspan="8"></td></tr>
<tr><td colspan="8"></td></tr>
<tr><td colspan="8"></td></tr>
<tr><td>Evaluation Technology</td><td colspan="2"></td><td colspan="8"></td></tr>
<tr><td>Technical Specifications</td><td colspan="11"></td></tr>
<tr><td rowspan="2">Data Points</td><td>1</td><td></td><td>2</td><td></td><td>3</td><td></td><td>4</td><td></td><td>5</td><td></td></tr>
<tr><td>6</td><td></td><td>7</td><td></td><td>8</td><td></td><td>9</td><td></td><td>10</td><td></td></tr>
<tr><td>Notes/ Observations</td><td colspan="11"></td></tr>
</table>

[33] Parties in consultation with IE may modify the template.

7) The Indicative Evaluation and Monitoring Process to be adopted by the IE for preparation of the KPI SOP Handbook is provided in the next table:

Table 7: Indicative KPI Evaluation Framework

Component	Sub Sl. No.	Key Performance Indicators (KPIs)	Evaluation Mode	Evaluation Formula	Evaluation Process	Data Collection Frequency	Waiver Applicability to be considered during KPI -SOP Handbook preparation & finalization	Indications for SOP and Subvention guideline
Primary Collection & Transportation	5.1	Minimum required deployment of Manpower	Automatic	<<Actual deployment of Manpower >> / <<Minimum Requirement as per approved MIOP>> * 100	Biometric Attendance system – (Machine / Mobile application) – shall be installed at mustering points and/ or attendance points and time in and time out of the concerned manpower shall be on real time basis as per the Concession agreement	Daily – Shift-wise	(a) Inclement Weather such as heavy rainfall, flood etc., wherein the worker couldn't commute to their workplace. (b) Political, non-political events Strike/ bandh/riot etc., which hinders the transportation of the workers to the workplace.	1. The mobile application, which is being used, is an extension of the biometric attendance system and employs the same technology. 2. In case of requirement of repair/replacement/restoration of the Bio metric system arises, then the same shall be rectified within the period of 48 hours and due information about the requirement for repair/replacement/restoration of the same shall be provided to IE within 2 hours, after information of occurrence. 3. Based on ground reality & challenges thereon for meeting the operational efficiency, the attendance for "time-in" can be marked 1hr before the shift starts time and "time-out" from the shift can be marked 1hr after the shift closure. 4. Post recording & verification of the attendance registers, IE shall sign or electronically approve. 5. Approved Template of Attendance register should be enclosed in the KPI-SOP Handbook.
	5.2	Minimum required deployment of BoVs	Automatic	<<Actual deployment of BoV >> / <<Minimum Requirement as per approved MIOP>> * 100	Each BOV shall have RFID (Radio frequency identification) installed and RFID readers installed at the entry of the parking bays/ facilities shall record the march "out and in" timings of the vehicles which shall be on real time basis as per the Concession agreement	Daily - Shift-wise	(a) Inclement Weather such as heavy rainfall, flood etc., wherein the worker couldn't commute to their workplace. (b) Political, non-political events Strike/ bandh/riot/ road blockages etc., which hinders the transportation of the workers to the workplace. (c) Fire accident and prolonged electricity supply failure (which is more than 24hours not due to concessionaire's fault), information will be given to IE and Authority within 2hrs	1.In case of failure of the RFID reader, the IE shall be intimated within the three hours after the occurrence such event. The concessionaire shall either (i) switch to alternative method (time and date stamped photographs or video feed (start of the shift) or switch to the alternative evaluation method by uploading the trip sheet (ii) another document or method as decided in aforesaid KPI-SOP. 2. In case the concessionaire reports the RFID reader failure, the IE shall verify the failure and after being satisfied with such failure shall approve the trip sheets of the drivers & asset deployed. The verified data shall be used for computation of KPI performance. The Concessionaire shall ensure that the issues related to RFID reader- software or hardware or software & hardware will be rectified within 48 hours from the occurrence of such event. 3. In case of alternative evaluation methodology being adopted, it will be intimated to IE through official WhatsApp group for IE verification. 4. Notification / Letter on changes/ revision in deployment/ revision or deviation in timings will be intimated by the concessionaire to IE and Authority as per the operational requirements within 2 hours through WhatsApp or App or through email. 5. Based on ground challenges and operational efficiency, attendance of "time-in" can be recoded one hour before the shift starts and "time-out" can be recorded one hour after the shift ends. However, for the evaluation purposes 8 hours of working period should be considered by IE.

Component	Sub Sl. No.	Key Performance Indicators (KPIs)	Evaluation Mode	Evaluation Formula	Evaluation Process	Data Collection Frequency	Waiver Applicability to be considered during KPI -SOP Handbook preparation & finalization	Indications for SOP and Subvention guideline
								6. Notification / Letter on changes/ revision in deployment and revision in timings will be intimated by the concessionaire to IE and Authority as per operational requirements within 2 hours either through WhatsApp / App / email. 7. The log sheet template approved in KPI SOP Handbook shall be used for record keeping purpose. .
	5.3 (a)	100 % Coverage of Households excluding TNUHDB Area	Manual	<<Actual coverage of HHs >> / <<Minimum coverage Requirement as per approved MIOP>> * 100	The IE & Authority shall undertake daily surveys based on stratified random sampling.	Daily - Shift-wise	(a) Inclement Weather and flood, the BOVs cannot carry out the Door-to-door collection due to water prone areas, in such situations 2-ton tipper will be sent and collected the waste from households. (b) Political, non-political events/ road blockages/ Strike/ bandh/ riot etc., (c) Every week the Concessionaire shall intimate the IE and authority on the list of households/ TNUHDB Area/ which are not cooperating. IE and authority shall take appropriate action	1. From takeover to COD, the concessionaire shall conduct a baseline survey for enumeration of HHs, TNUHDB Area.The monthly targets shall be fixed. 2. Based on the target fixed the average zone wise deficiency level shall be calculated for this KPI evaluation. 3. The Critical numbers will be revised based on the monthly targets which will be derived from base line data. The list of households delivering unsegregated waste will be intimated by the concessionaire to IE and Authority. 4. From take over to COD, the concessionaire shall geofence all TNUHDB Area. 5. Notification / Letter on changes/revision in deployment and timings will be intimated by the concessionaire to IE and Authority as per operational requirements within 2 hours. 6. The survey timing, route & schedule to be conducted by IE will be mutually decided by concessionaire and IE and will be shared with the Authority within 5 working days before the start of the calendar month. In case there is absence of IE supervisor for a particular route. the IE can choose deploy another supervisor for commencement of survey. 7. If there is any change in schedule of the BOV route, Concessionaire shall inform those changes in BOV deployment to the IE and Authority prior to the start of the shift.. 8. While evaluating the KPI, all vacant houses/ vacant flats / land having only boundary wall etc will
	5.3 (b)	Timely Collection of Solid Waste from TNUHDB Area	Hybrid	<<Actual coverage of TNUHDB Area >> / <<Minimum coverage Requirement as per approved MIOP>> * 100	(a) Geo-fencing of all TNUHDB Area (b) The IE & Authority shall undertake daily surveys based on stratified random sampling.	Daily - Shift-wise		

Component	Sub Sl. No.	Key Performance Indicators (KPIs)	Evaluation Mode	Evaluation Formula	Evaluation Process	Data Collection Frequency	Waiver Applicability to be considered during KPI -SOP Handbook preparation & finalization	Indications for SOP and Subvention guideline
								be removed from the 'total number of households' list in the calculation methodology/ formula. The same methodology of non-listing will be followed for TNUHDB Area. 10. If the households are not handing over the solid waste for continuous period of 4 days during the aforesaid survey. List of non-participating households (HH not giving solid waste) will be submitted to authority and IE by the Concessionaire. Post such evaluation, the continuous defaulter's details will be sent to IE and Authority for taking appropriate action. If no action is taken, such defaulting households will not be considered in the next cycle's evaluation. 10. The Concessionaire shall provide awareness on segregation and sensitize households to provide waste promptly during the door-to-door collection to their respective BOV operator and not to dispose waste in unsegregated manner and/or lettering of waste. 11. IEC awareness will be provided to the household continuously and the Concessionaire will provide hand bills to the households. The survey will be done by the IE along with the concessionaire as per KPI SOP. 12. At the end of evaluation of the route, IE personnel and Concessionaire shall mutually share the report, Concessionaire IEC department and BOV driver shall be affixed in both IE's report as well as the Concessionaire's reports and the scanned copy of each route shall be shared within 24 hours by both the parties. 13. Following enclosures shall be part of the KPI SOP Handbook. • Template of IE's Visual Inspection report • List of HHs, TNUHDB Area as per baseline survey. • Notification slip • Summary sheet

Component	Sub Sl. No.	Key Performance Indicators (KPIs)	Evaluation Mode	Evaluation Formula	Evaluation Process	Data Collection Frequency	Waiver Applicability to be considered during KPI -SOP Handbook preparation & finalization	Indications for SOP and Subvention guideline
	5.4	Collection of solid waste from Market Areas	Automatic	<<Actual trips>> / <<Total specified Trips as per Approved MIOP >> * 100	Geo fence – The markets in the project area shall be geofenced and the vehicle in and out timings will be monitored via GPS devices fitted in the vehicle on real time basis as per the Concession agreement	Daily	(a) Inclement weather and flood, the market conservancy will be undertaken based on the viability to reach the market. Wherever BOV could not be sent alternate methodology will be adopted. (b) Political, non-political events traffic blockages, Strike/ bandh/ riot etc..	1. From takeover to COD, the concessionaire shall conduct a baseline survey for enumeration of Market Area, Commercial BWGs and institutional BWGs or any waste generator which falls under the category of BWG. The details of the survey shall be shared with IE and Authority with name of the those entity with latitude & longitude details and number of times of waste collection activities to be performed. This numbers will be base for number of trips to be undertaken by vehicles including types of vehicles to be deployed. 2. The detailed list of the markets shall be enclosed as annexure in KPI SOP Handbook 3. The evaluation will be done based on the Geofence details of the market and GPS details of the vehicle which shall be uploaded in the MIS system. In case of any failure in the automated system, Trip sheet and photographs with coordinates will be uploaded and provided by the end of the day, along with date & time lat-long photographs. 4. As per operational requirements, certain location may have dedicated vehicles for market clearance. 5. Notification / Letter on changes/ revision in deployment and timings will be intimated by the concessionaire to IE and Authority as per operational requirements within two hours to the operational IE teams. 6..In case of festivals such as Pongal, Diwali, Ayudha pooja, Christmas, eid, bakrid, or any festival or national occasion or sports or important dignities visit etc, the Concessionaire shall prepare an alternative methodology for fulfilment of the KPI subject to IE approval. It is further clarified that at least 7 days prior to the occurrence of the aforesaid festivals the concessionaire shall share that information with IE. During that period, the KPI shall be evaluated based on the approved alternative methodology. The approval will be given within 5 days by the IE and in case the IE fails to approve those methodology without raising any objection within five days the proposed methodology as proposed by the concessionaire shall prevail..

Component	Sub Sl. No.	Key Performance Indicators (KPIs)	Evaluation Mode	Evaluation Formula	Evaluation Process	Data Collection Frequency	Waiver Applicability to be considered during KPI -SOP Handbook preparation & finalization	Indications for SOP and Subvention guideline
	5.5	Supplying segregated minimum guaranteed solid waste to decentralized units	Manual	<<Actual Quantity supplied >> / <<Quantity to be supplied by approved MIOP >> * 100	Waste quantity supplied report with due signature of the representative of treatment/ processing center or fulfilment report of decentralised processing unit	Daily	(a)Inclement weather or disaster like situations like heave rainfall, flood will affect the transportation of waste to the treatment centers (b) Political, non-political events Strike/ bandh/riot/ traffic blockage etc., which hinders the transportation of the workers to the workplace.	1. Minimum guaranteed waste shall be delivered as per Schedule 6, in the receptacles provided by the Decentralize Processing Units (DPU) 2. In case the DPU refuses to accept the waste or are non-operational, the concessionaire shall duly inform the IE and deposit the waste in the bins provided by the DCU. The maximum waste deposited shall depend on the available storage at bin/ DCU daily intake capacity. Concessionaire shall provide photographs with coordinates on non- acceptance of waste by the DPU which shall be considered as tonnage fulfilled for the respective DPU. Reciept form for the partial acceptance of waste shall be signed by authorized personnel of the DPU and the same shall be considered as fulfillment of obligations by the concessionaire, provided that the DPU is unable to accept the entire waste. 3. List of the DPU will be updated by the Authority with the processing/ feeding capacity including confirmation of existence of weighing scale. The Concessionaire will ensure to deliver waste equivalent to intake capacity of the DPU. 4. All kinds of wet waste shall be accepted by the DPU as per bye laws, which are meant to process the wet waste. 5. The waste quantity delivery report will be collected & collated from DPU and uploaded in the MIS system by IE. 6. The vehicles shall not be delayed more than 15 minutes DPU which may affect adversely the subsequent delivery to next DPU trips and resulting in short delivery of waste quantum.. 7. As the case may be, the Notification / Letter on changes/ revision in deployment of vehicle and timings will be intimated by the concessionaire to IE & Authority as per operational requirements within two hours. 8. Following to be enclosed in KPI SOP Handbook: • Template of Waste quantity supplied report • Template of Trip sheet

Component	Sub Sl. No.	Key Performance Indicators (KPIs)	Evaluation Mode	Evaluation Formula	Evaluation Process	Data Collection Frequency	Waiver Applicability to be considered during KPI -SOP Handbook preparation & finalization	Indications for SOP and Subvention guideline
	5.6	Collection of Horticultural waste from Parks & Roadsides.	Automatic	<<Actual Vehicle deployed>> / <<Minimum Number of vehicles as per Approved MIOP >> * 100	Each Vehicle shall have RFID (Radio frequency identification) tags installed and RFID readers installed at the entry of the parking bays/facilities shall record the, march out and in timings of the vehicles which shall be on real time basis as per the Concession agreement	Daily	(a) Inclement Weather or disaster like situations like heavy rainfall, flood will make unviable situations to carry out the conservancy work (b) Political, non-political events Strike/ bandh/riot/ traffic blockage etc., which hinders the transportation of the workers to the workplace.	1. In case of failure of the RFID reader: IE shall be duly intimated within the two hours from the start of the shift and the Concessionaire shall switch to the alternative evaluation method by uploading the trip sheet or any other MIS documentation method. 2. The IE will verify the failure and after verification of the fleet logbook & trip sheets of the drivers, the same will be duly signed by IE. The verified data shall be used for computation of KPI compliance. 3. The Concessionaire shall ensure that the issues related to RFID reader and its related software will be rectified within 48 hours from the occurrence of such event. 4. In case of triggering of alternative evaluation methodology, it will be intimated to IE through official WhatsApp group where it shall be verified by IE. 4. Notification / Letter on changes/ revision in deployment and timings will be intimated by the concessionaire to IE and Authority as per the operational requirements within 2 hours. 5. The KPI SOP Handbook shall have Template of trip sheet as Annexure.
	5.7	Collection & Deposition of Domestic Hazardous waste at assigned DHW Deposit Center	Automatic	<<Actual trips>> / <<Total specified Trips as per Approved MIOP >> * 100	The DHW deposition centers in the project areas are geofenced and the vehicle in and out timings will be monitored via GPS devices fitted in the vehicle on real time basis as per the Concession agreement.	Daily	(a) Inclement Weather such as heavy rainfall, flood etc., wherein the worker couldn't commute to their workplace. (b) Political, non-political events Strike/ bandh/riot/ traffic blockage etc., which hinders the transportation of the workers to the workplace.	1. Notification letter of changes/revision in deployment and timings will be intimated by the concessionaire to IE and Authority as per operational requirements within 2 hours. 2. The critical number shall be calculated from the number of trips being carried out. 3. The KPI SOP Handbook will have: (i) Template of fleet log sheet report and (ii) Trip sheet as Annexures.

Component	Sub Sl. No.	Key Performance Indicators (KPIs)	Evaluation Mode	Evaluation Formula	Evaluation Process	Data Collection Frequency	Waiver Applicability to be considered during KPI -SOP Handbook preparation & finalization	Indications for SOP and Subvention guideline
	5.8	Provisioning of Separate Functional Bins in BoVs for segregated solid waste deposition	Automatic	<<Actual deployment of separate functional bins in BoVs >> / <<Total number of required separate functional bins in BoVs as per Approved MIOP>> * 100	Each BOV bin shall have RFID tag (Radio frequency identification) installed and RFID readers installed at the entry of the parking bays/facilities shall record the, march out and in timings of the bins which shall be on real time basis as per the Concession agreement.	Daily	(a) Inclement Weather such as heavy rainfall, flood etc., wherein the worker couldn't commute to their workplace. (b) Political, non-political events Strike/ bandh/riot/ traffic blockage etc., which hinders the transportation of the workers to the workplace.	1. In case of failure of the RFID reader, the IE shall be duly intimated within the two hours from the start of the shift and the Concessionaire shall switch to the alternative evaluation method by uploading the trip sheet or other document as stated in aforesaid evaluation back -up. 2. The IE shall verify the failure and after verification of the fleet logbook and trip sheets of the drivers, the same shall be duly signed by IE. The verified data shall be used for computation of KPI performance. The Concessionaire shall ensure that the issues related to RFID reader and related software will be rectified within 48 hours from the occurrence of such event. 3. In case of triggering of alternative evaluation methodology, it will be intimated to IE through WhatsApp group which can be verified & vetted by IE. 4. Notification letter on changes will be intimated by the concessionaire to IE and Authority as per the operational requirements within 2 hours. 5. The KPI SOP Handbook will have: Template of fleet report is enclosed as Annexure
	5.9	Installation of Signage Boards on Streets and establish vantage points	Hybrid	<<Total number of signage boards/ Paints as per Approved MIOP (-) Verified Evidence of actual board or painting in bad condition by IE >> / <<Total number of Signage boards/Paints as per Approved MIOP >> * 100	IE Photo Evidence from IE app on violation of damaged signage boards	Daily	Deliberate removal of signage board in case the signage board is fixed on private wall or any wall which is not owned by the Authority.	1. IE shall take photo evidence on violation. 2. Any issues with respect to signage board: vandalizing, damage, posters being pasted on signage boards, deliberate removal of signage board by the residents, will be addressed by IE though IE App.. The timeline for reinstalling signage board is 24 hours from the date of notification of compliant to IE / AUTHORITY. KPI will not be calculated during such duration. 3. The Signage board will have details such as the street name, timing of waste collection, phone number, toll free number. The concessionaire shall submit to IE the details like latitude and longitude at the time of takevoer. 4. IE 's photographic evidence on violation through the mobile application will be automatically integrated with the MIS reporting structure.

Component	Sub Sl. No.	Key Performance Indicators (KPIs)	Evaluation Mode	Evaluation Formula	Evaluation Process	Data Collection Frequency	Waiver Applicability to be considered during KPI -SOP Handbook preparation & finalization	Indications for SOP and Subvention guideline
Street Sweeping	6.1 (a)	Timely Street sweeping on daily basis Manual	Hybrid	<< Total number of daily valid street sweeping micro routes as per Approved MIOP (-) Verified Evidence of violations submitted by IE>> / <<Total number of daily valid street sweeping micro routes as per Approved MIOP >> * 100	IE Photo Evidence from IE app on violation of non-street sweeping within the stipulated timelines	Daily	(a) Inclement Weather such as heavy rainfall, flood etc., wherein the worker couldn't commute to their workplace. (b) Political, non-political events Strike/ bandh/riot/ road blockages etc., which hinders the transportation of the workers to the workplace; (c) Infrastructure work in progress like: metro rail works , PWD road works, power cable work, gas pipeline work, telephone line work, collapse of building and any other work including drain construction & authority's work. Depending on intensity this shall be suspended 10 meters to such distance as deemed necessary. (d) post cyclone 15 days this shall be suspended. (e) Bad road condition; (f) tree hanging on road affecting mechanical sweeper movement; (g) high speed breaker damaging brush of mechanical sweeper.	1. A detailed street wise data on the street sweeping activities with details on the street names, time of sweeping with coordinates shall be provided to IE and Authority. 2. In case of non-sweeping of streets within the fixed timelines, IE shall upload the photographs on violations within 30 minutes from streetwise stipulated timelines. IE 's photographic evidence (date, time and lat-log) on violation through the mobile application will be automatically integrated with the MIS reporting. 3. During certain circumstances like shedding of leaves, in Autumn/spring season, there may be delay in clearances so only the non-clearance of waste or litters shall only be considered for evaluation of KPI. 4. In case of (i) festivals such as Pongal, Diwali, Eid, Bakrid, Ayudha Pooja, Christmas etc,(ii) special events like sports activity, dignitaries visit, funeral procession, special movement etc; the Concessionaire shall prepare an alternative methodology for fulfilment of the KPI subject to IE approval. The concessionaire at least 7 days in advance of the to the occurrence of the aforesaid festivals. During that period, the KPI shall be evaluated on the basis of the approved alternative methodology. The approval shall be given with in 5 days. The special event shall be dealt as contingency plan. 5. Notification / Letter on changes/revision in deployment and timings will be intimated by the concessionaire to IE and Authority as per operational requirements within 2 hours. 6. The waiver operational guideline shall be finalized during the KPI-SOP hand book preparation stage.

Component	Sub Sl. No.	Key Performance Indicators (KPIs)	Evaluation Mode	Evaluation Formula	Evaluation Process	Data Collection Frequency	Waiver Applicability to be considered during KPI -SOP Handbook preparation & finalization	Indications for SOP and Subvention guideline
	6.1 (b)	Timely Street sweeping on daily basis Mechanical	Automatic	(Actual Effective Kilometers) / (Minimum Effective Kilometers as per Approved MIOP) * 100	The average sweeping capacity is x km/ hr. The following formula shall be used to compute the effective kilometers which is the number of kilometers swept by the mechanical sweeper. Effective Kilometers = y* x km/ hr Where y is the total hours reading from the sweeping (auxiliary) engine in the concerned shift. The vehicle tracking shall be done by GPS and the total hours reading from the sweeping (auxiliary) engine shall be taken in the form of a time and date stamped photograph of the trip sheet and uploaded via the app/ dashboard.	Daily	(a) Inclement Weather such as heavy rainfall, flood etc., wherein the worker couldn't commute to their workplace. (b) Political, non-political events Strike/ bandh/riot/ road blockages etc., which hinders the transportation of the workers to the workplace; (c) Infrastructure work in progress like: metro rail works , PWD road works, power cable work, gas pipeline work, telephone line work, collapse of building and any other work including drain construction & authority's work. Depending on intensity this shall be suspended 10 meters to such distance as deemed necessary. (d) post cyclone 15 days this shall be suspended. (e) Bad road condition; (f) tree hanging on road affecting mechanical sweeper movement; (g) high speed breaker damaging brush of mechanical sweeper.	1. A detailed street wise data on the street sweeping activities with details on the street names, time of sweeping with coordinates shall be provided to IE and Authority. 2. In case of non-sweeping of streets within the fixed timelines, IE shall upload the photographs on violations within 30 minutes from streetwise stipulated timelines. IE 's photographic evidence (date, time and lat-log) on violation through the mobile application will be automatically integrated with the MIS reporting. 3. During certain circumstances like shedding of leaves, in Autumn/spring season, there may be delay in clearances so only the non-clearance of waste or litters shall only be considered for evaluation of KPI. 4. In case of (i) festivals such as Pongal, Diwali, Eid, Bakrid, Ayudha Pooja, Christmas etc,(ii) special events like sports activity, dignitaries visit, funeral procession, special movement etc; the Concessionaire shall prepare an alternative methodology for fulfilment of the KPI subject to IE approval. The concessionaire at least 7 days in advance of the to the occurrence of the aforesaid festivals. During that period, the KPI shall be evaluated on the basis of the approved alternative methodology. The approval shall be given with in 5 days. The special event shall be dealt as contingency plan. 5. Notification / Letter on changes/revision in deployment and timings will be intimated by the concessionaire to IE and Authority as per operational requirements within 2 hours. 6. Mechanical sweeper can sweep on an average 4 km/ hr, which shall be taken as the baseline for effective road coverage calculation along with the Hour meter reading in the Mechanical Sweeper. 7. For avoidance of traffic and other road hazard, the working hours of the Mechanical sweeper is calculated as minimum 7 hours from the time of march out. 8. Any brake down of the vehicles, alternate vehicle will be sent for replacement. Trip sheet details and time out details will be shared to IE for evaluation purpose. 9. The KPI SOP Handbook will have annexures as: Template of trip sheet.

Component	Sub Sl. No.	Key Performance Indicators (KPIs)	Evaluation Mode	Evaluation Formula	Evaluation Process	Data Collection Frequency	Waiver Applicability to be considered during KPI -SOP Handbook preparation & finalization	Indications for SOP and Subvention guideline
	6.2	Minimum required deployment of Manpower	Automatic	<<Actual deployment of Manpower >> / << Minimum deployment as per Approved MIOP>> * 100	Biometric Attendance system – (Machine / Mobile application) – have been installed at mustering points and/ or attendance points and time in and time out of the concerned manpower shall be on real time basis as per the Concession agreement.	Daily	(a) Inclement Weather such as heavy rainfall, flood etc., wherein the worker couldn't commute to their workplace (b) Political, non-political events road/traffic blockages, Strike/ bandh/ riot etc (c) any force majeure event affecting the deployment of manpower.	1. The mobile application may be used which will have an extension of the biometric attendance system with iris scan or similar technology. 2. In case of requirement of repair/replacement/restoration of the Bio metric with iris scanner system, the repair/replacement will be done within the period of 48 hours. Due information on the same will be provided to IE within 2 hours. 3. Post verification, the attendance registers shall be duly signed by IE on daily basis. 4. Notification / Letter on changes /revision in deployment and timings will be intimated by the concessionaire to IE and Authority as per operational requirements within 2 hours. 5. The KPI SOP Handbook will have: Template of Attendance register as annexure.
	6.3 (a)	Minimum required Deployment of Small/Big Mechanical Street Sweeper	Automatic	<<Actual deployment of Mechanical Sweepers >> / <<Minimum deployment as per Approved MIOP>> * 100	Each Vehicle shall have RFID tag installed and RFID readers installed at the entry of the parking bays/facilities which shall record the, march out and in timings of the vehicles which shall be on real time basis as per the Concession agreement.	Daily	(a) Inclement weather, flood, heavy rainfall etc will affect the mobilization of such vehicles, during such time manual sweepers will be deployed to clean the project areas (b) Political, non-political events road/traffic blockages, Strike/ bandh/riot etc., (c) Road diversion due to infrastructure work, accident, and special events.	1. In case of failure of the RFID reader, the IE shall be duly intimated within the two hours from the start of the shift and the Concessionaire shall switch to the alternative evaluation method by uploading the trip sheet or other document as stated in aforesaid evaluation back -up in G drive. 2. The IE shall verify the failure and thereafter, post verification of the fleet logbook and trip sheets of the drivers, the same shall be duly signed by IE. The verified data shall be used for computation of KPI performance. The Concessionaire shall ensure that the issues related to RFID reader and its related software will be rectified within 48 hours from the occurrence of such event. 3. In case of triggering of alternative evaluation methodology, it will be intimated to IE through official WhatsApp group which can be verified by IE. 4. Notification / Letter on changes/ revision in deployment and timings will be intimated by the concessionaire to IE and Authority as per the operational requirements within 2 hours. 5. Damaged and inaccessible roads will in turn resulting in mechanical failure hance such mechanical failure will be given to IE and Authority through official WhatsApp group within three hours. 6. Alternative methodology of manual sweeping will be performed with prior due intimation to IE. 7. The KPI SOP Handbook will have: Trip sheet of Mechanical Sweeper as annexure.

Component	Sub Sl. No.	Key Performance Indicators (KPIs)	Evaluation Mode	Evaluation Formula	Evaluation Process	Data Collection Frequency	Waiver Applicability to be considered during KPI -SOP Handbook preparation & finalization	Indications for SOP and Subvention guideline
	6.3 (b)	Minimum required Deployment of 2- Metric Ton & 10-Metric Ton Tipper Trucks	Automatic	<<Actual deployment of Tippers >> / <<Minimum deployment as per Approved MIOP >> * 100	Each Vehicle shall have RFID tag installed and RFID readers installed at the entry of the parking bays/facilities which shall record the, march out and in timings of the vehicles which shall be on real time basis as per the Concession agreement	Daily	(a) Inclement weather, flood, heavy rainfall etc will affect the mobilization of such vehicles, during such time the deployment will be suspended partially.	1. In case of failure of the RFID reader, the IE shall be duly intimated within the three hours from the start of the shift and the Concessionaire shall switch to the alternative evaluation method by uploading the trip sheet or other document for evaluation backup. 2. The IE shall verify the failure and thereafter, post verification of the fleet logbook and trip sheets of the drivers, the same shall be duly signed by IE. The verified data shall be used for computation of KPI performance. The Concessionaire will ensure that the issues related to RFID reader and its software will be rectified within 48 hours from the occurrence of such event. 3. In case of triggering of alternative evaluation methodology, it will be intimated to IE through official what app group which can be verified by IE. 4. Notification / Letter on changes/ revision in deployment and timings will be intimated by the concessionaire to IE and Authority as per the operational requirements within 2 hours. 5. The following shall be enclosed as Annexures in the KPI SOP Handbook: Template on Trip sheet of 2 ton tipper
	6.4	Minimum required deployment of wheeled bins & other equipment as per MIOP	Hybrid	<< Total number of wheeled bins as per Approved MIOP (-) Verified evidence of violations submitted by IE >> / <<Total number of wheeled bins as per Approved MIOP>> * 100	IE Photo Evidence – The violation photographs shall be uploaded by the Independent engineer through IE mobile applications.	Daily	(a) Inclement Weather such as heavy rainfall, flood etc (b) Political, non-political events , road/traffic blockages, Strike/ bandh/riot etc	1. Each & every sweeper deployed in “A” shift shall be provided with equipment as mentioned in the MIOP. 2. Each & every sweeper deployed in the “C” shift will be provided with brushes/broom, (may be collection pan as per requirement), 3. In the night time for the safety of women employee cluster activity should be practiced. 4. One number of “wheeled barrow” will be provided to three/four manual sweepers. 5. For C shift, violation photographs shall be considered only when the group of employees captured without any wheeled bins.

Component	Sub Sl. No.	Key Performance Indicators (KPIs)	Evaluation Mode	Evaluation Formula	Evaluation Process	Data Collection Frequency	Waiver Applicability to be considered during KPI -SOP Handbook preparation & finalization	Indications for SOP and Subvention guideline
	6.5	Collection of solid waste along Canal/ Riverbanks from pre-designated locations	Hybrid	<<Total number of Locations cleared photographic evidences – violations photographic evidences by IE >> / <<Total number of to be cleaned as per Approved MIOP >> * 100	A list of locations shall be finalized by all the concerned parties (Annexure in MIOP). In all the locations provided by IE, the concessionaire shall carry out C&T of solid waste mixed with silt to the designated locations. For each location, the violation photographs will be taken by IE at the mutually agreed demarcated vantage points. Three post operation photograph (time and date) shall be taken and uploaded in the app by Concessionaire to be evaluated by IE. IE shall within 11 am- 2 pm shall verify and upload three violation photographs for each stretches.	Daily	(a) Inclement Weather such as heavy rainfall, flood etc., the services could not be performed. (b) major repairing work under progress. (c) there is boundary wall along the bank or the bank is concrete and employee safety is an issue.	1. Solid waste dumped along the canal banks will be removed as per the SOP & scope of work. 2. The deposited mixed garbage with the silt will not come under the scope of the concessionaire from the canal stretches, riverbanks, pathways etc. The waste mixed with large quantum of sit and debris will not be removed by the concessionaire. 3. The concessionaire shall on fortnightly basis remove the litter along the canal bank or large drain but if there is likely chance of compromise of safety of employee or the site is inaccessible or there is danger then the concessionaire shall not deploy personal, and Authority shall make arrangement with the concerned department. 4. The concessionaire shall lift waste from the finalized locations in the approved MIOP. 5. Notification / Letter on changes/ revision in deployment and timings will be intimated by the concessionaire to IE and Authority as per operational requirements within 2 hours. 6. The KPI SOP Handbook shall have list of finalized locations as per MIOP.
Secondary C&T	7.1 (a)	Clearing of bins as per MIOP subject to the condition that no bins are overflowing	Automatic	<<Total number of bins to be cleared as per approved MIOP – Number of overflowing bins under violations >> / <<Total number of bins to be cleared as per approved MIOP>> * 100	Each Refuse Compactor vehicle shall have RFID readers installed and RFID tags shall be installed in the RC bins. Whenever the RC vehicle lifts RC bins, a ping goes to the Concessionaire server, based on the interaction between RFID tag and RFID reader. Each such ping gets recorded as fulfillment of clearing of bins and the details shall be transmitted on real time basis as per the Concession agreement	Daily	(a) Inclement Weather such as heavy rainfall, flood etc the services could not be performed (b) Political, non-political events, road/traffic blockages, Strike/ bandh/riot etc	1. Overflowing of bins is defined as the bin full to brim and there is evidence of overflowing of waste by way of litter. In the case of multiple bins being placed at the particular location, only the bin that is overflowing will only be considered for evaluation purposes. But the scattered waste due to public and little quantity of the garbage in the bins shall not be construed as overflowing. The Concessionaire shall ensure that all garbages scattered in and around the bins shall be removed in the same shift. 2. Any stray animal menace / informal waste pickers, throwing the waste from the bins to ground shall not be taken in to account for such computation. 3. Notification on such illegal dumping will be intimated by the concessionaire to IE and Authority within 48 hours. 4. The KPI SOP Handbook will have template of the trip sheet of Refuse compactor.

Component	Sub Sl. No.	Key Performance Indicators (KPIs)	Evaluation Mode	Evaluation Formula	Evaluation Process	Data Collection Frequency	Waiver Applicability to be considered during KPI -SOP Handbook preparation & finalization	Indications for SOP and Subvention guideline
	7.1 (b)	Disinfection of bins as per MIOP	Automatic	<<Actual number of disinfection machines deployed >> / <<total number of disinfection machines to be deployed as per approved MIOP>> * 100	Each disinfection machines shall have RFID tag installed and there shall be RFID readers installed at the entry of the parking bays/facilities where the readers shall record the, "march out" and "march-in" timings of the vehicles which shall be on real time basis as per the Concession agreement.	Daily	(a) Inclement Weather such as heavy rainfall, flood etc the services could not be performed (b) Political, non-political events road/traffic blockages, Strike/ bandh/riot etc	1. In case of failure of the RFID reader, the IE shall be duly intimated within the three hours from the start of the shift and the Concessionaire shall switch to the alternative evaluation method by uploading the trip sheet or other document as stated in aforesaid evaluation process and same shall be backed -up. 2. The IE will verify the failure and thereafter, post verification of the fleet logbook and trip sheets of the drivers, the same shall be duly signed by IE. The verified data shall be used for computation of KPI performance. The Concessionaire will ensure that the issues related to RFID reader and its related software will be rectified within 48 hours from the occurrence of such event. 3. In case of triggering of alternative evaluation methodology, it will be intimated to IE through official WhatsApp group which can be verified by IE. 4. The route maps will be shared with IE and Authority by the concessionaire. 5. The date, time & lat-long photographs of the disinfection of bins shall be provided by the Concessionaire 6. Notification letter on changes/ revision in deployment and timings will be intimated by the concessionaire to IE and Authority as per operational requirements within 2 hours. 7. The KPI SOP Handbook will have Template of "Fleet Log sheet of Disinfection Vehicles".
	7.2	Transportation of segregated waste via minimum required deployment of functional vehicles	Automatic	<<Actual deployment of Functional Vehicles>> / <<Minimum required deployment as per Approved MIOP >> * 100	Each vehicle shall have RFID tag installed and RFID readers installed at the entry of the parking bays/facilities shall record the, march out and in timings of the vehicles which shall be on real time basis as per the Concession agreement.	Daily	(a) Inclement Weather such as heavy rainfall, flood etc the services could not be performed (b) Political, non-political events road/traffic blockages, Strike/ bandh/riot etc	1. In case of failure of the RFID reader, the IE shall be duly intimated within the three hours from the start of the shift and the Concessionaire shall switch to the alternative evaluation method by uploading the trip sheet or other document as stated in aforesaid evaluation process and same shall be backed -up. 2. The IE shall verify the failure and thereafter, post verification of the fleet logbook and trip sheets of the drivers, the same shall be duly signed by IE. The verified data shall be used for computation of KPI performance. The Concessionaire shall ensure that the issues related to RFID reader and its related software will be rectified within 48 hours from the occurrence of such event. 3. In case of triggering of alternative evaluation methodology, it will be intimated to IE through official WhatsApp group which can be verified by IE. 4. Notification letter on changes/ revision in deployment and timings will be intimated by the concessionaire to IE and Authority as per the operational requirements within 2 hours. 5. For avoidance of traffic and other road hazard, the working hours of the Compactor is calculated 7 hours from the time of march out. 6. The route maps shall be shared with IE and Authority by the concessionaire while submitting the MIOP.

Component	Sub Sl. No.	Key Performance Indicators (KPIs)	Evaluation Mode	Evaluation Formula	Evaluation Process	Data Collection Frequency	Waiver Applicability to be considered during KPI -SOP Handbook preparation & finalization	Indications for SOP and Subvention guideline
								7. The following shall be enclosed as Annexures in the KPI SOP Handbook: • Template on Fleet Log sheet of vehicles •The template of the trip sheet of Refuse compactor
	7.3	Minimum required deployment of manpower	Automatic	<<Actual deployment of Manpower >> / << Minimum required deployment as per Approved MIOP >> * 100	Biometric Attendance system – (Machine / Mobile application) – shall be installed at mustering points and/ or attendance points and time in and time out of the concerned manpower shall be on real time basis as per the Concession agreement.	Daily	(a) Inclement Weather such as heavy rainfall, flood etc wherein the worker couldn't commute to their workplace. (b) Political, non-political events, road/traffic blockages, Strike/ bandh/riot etc.	1. The mobile application being used is an extension of the biometric attendance system and employs the same technology. 2. In case of requirement of repair/replacement/restoration of the Bio metric with iris scan system, the same shall be done within the period of 48 hours. Due information on the same shall be provided to IE within 2 hours. 3. Notification letter on changes/ revision in deployment and timings will be intimated by the concessionaire to IE and Authority as per operational requirements within 2 hours. 4. Post verification of the attendance registers, it will be duly signed by IE on daily basis. 5. The KPI SOP Handbook will have Template of Attendance register.
	7.4	Designated number of functional closed bins- in specified color-for wet solid waste, dry solid waste, street sweeping solid waste, silt, etc. as per MIOP	Automatic	<< Minimum required deployment of Functional Bins as per Approved MIOP (-) Verified Evidence of Violations submitted by IE>> / << Minimum required deployment of Functional Bins as per Approved MIOP>> * 100	IE Photo Evidence – The violation photographs shall be uploaded by the Independent engineer through IE mobile applications.	Daily	(a) Fire accident, theft, vandalizing the bins etc	1. Any damages, fires or other similar like situation shall be notified within 24 hours to IE and the Authority by the Concessionaire and IE along with Authority shall take appropriate action against such violators. 2. IE shall take photo evidence. 3. If any damage or vandalizing of the bins is found, it will be informed to IE & the Authority for taking necessary action. 4. Any issues with respect to vandalizing, damage, stealing of lids on bins, will be addressed by IE by through IE app., The timelines for reinstalling is lids is 24 hours from the time /date of compliant to IE/the Authority. KPI will not be calculated during such duration. Further, at any place if the lid of the bin vandalized more than three times then the concessionaire shall not replace the lid and the concessionaire shall not be levied penalty.

Component	Sub Sl. No.	Key Performance Indicators (KPIs)	Evaluation Mode	Evaluation Formula	Evaluation Process	Data Collection Frequency	Waiver Applicability to be considered during KPI -SOP Handbook preparation & finalization	Indications for SOP and Subvention guideline
	7.5	Bin replacement (Broken/Stolen) within 24 hours	Hybrid	<<Actual Number of Bin Replacements>> / <<Total number of registered bin replacement requests >> * 100	Compliant redressal report with photographic evidences provided by concessionaire	As per requirement	(a)Inclement Weather such as heavy rainfall, flood etc the services could not be performed (b)Political, non-political events road/traffic blockages, Strike/ bandh/riot etc. (c)Theft, vandalizing the bins or lids/wheels such as fire accident, removal of bins etc, till then KPI shall be waived.	1. Any damages, fires or other similar like situation shall be notified within 24 hours to IE and authority by the Concessionaire and IE and authority shall take appropriate action against such violators. 2. IE shall take photo evidences. 3. If any damage or vandalizing of the bins is found, it will be informed to IE and the Authority for taking necessary action. If vandalization of the RC Bin is recorded more than three times, the concessionaire shall not be held responsible and shall not be forced to install new bin; however concessionaire may repair the bin accordingly. 4. Notification letter on changes will be intimated by the concessionaire to IE and Authority as per operational requirements and inventory list shall be updated accordingly.
	7.6	Bin washing as per MIOP	Manual	<<Actual number of bins washed fortnightly>> / <<Total number of bins to be washed fortnightly as per Approved MIOP >> * 100	1. GPS stoppage report 2. Manual Bin washing time sheet	Fortnightly	(a) Inclement Weather such as heavy rainfall, flood etc the services could not be performed for continuous period of 14 days (b) Political, non-political events & Public Events, road/traffic blockages, Strike/ bandh/riot etc. for continuous period of 14 days	1. The route maps have been shared with IE and Authority by the concessionaire in the approved MIOP. 2. The concessionaire shall take date & time stamped photographs and shall upload on the App. 3. Notification letter on changes in deployment and timings will be intimated by the concessionaire to IE and Authority as per operational requirements within 2 hours. 4.. The KPI SOP Handbook: Template on manual bin washing time sheet
	7.7	Provisioning of Top Cover for Secondary C&T vehicles	Hybrid	<< Total number of vehicles provisioned with top cover as per Approved MIOP (-) Verified Evidences of violations while transporting the waste to the dump yard/processing facility>> / <<Total number of vehicles provisioned with top cover as per Approved MIOP>> * 100	The violation photographs shall be uploaded by the Independent engineer through IE mobile applications.	Daily	NA	1. The Evaluation can be computed during the transportation of waste unloading to the processing DPU or CPU or dumpsite. 2. The camera at vantage point shall monitor. 3. It will not be considered as a violation when the material is being loaded from one collection point to another.

Component	Sub Sl. No.	Key Performance Indicators (KPIs)	Evaluation Mode	Evaluation Formula	Evaluation Process	Data Collection Frequency	Waiver Applicability to be considered during KPI -SOP Handbook preparation & finalization	Indications for SOP and Subvention guideline
	7.8	O&M of Static Compactors as per MIOP	Hybrid	To be finalized during MIOP Stage	To be finalized during MIOP Stage	Daily	(a) Inclement Weather such as heavy rainfall, flood etc the services could not be performed for continuous period of 14 days (b) Public resistance.	1. To be monitored through deployment of camera. 2. The hook loader truck shall be monitored by way of GPS. 3. The location shall be geo fenced. 4. The KPI-SOP handbook shall have the log sheet.
	7.9 (a)	Supplying segregated minimum guaranteed solid waste to operational centralized processing facility	Automatic	<<Actual Quantity of waste supplied at gate of processing facility/dumpsite >> / <<Quantity to be supplied as per Approved MIOP >> * 100	For processing facilities equipped with weighbridge, weighment slip shall be uploaded through APP/MIS system. In case of weighbridges directly connected to the MIS system of the Authority, the weigh slip shall act as an alternative evaluation method. In case of processing facilities without weighbridge, weighment shall be done at the nearest weighment facility.	Daily	(a) Inclement Weather or disaster like situations like heave rainfall, flood will affect the transportation of waste to the treatment centers. (b) Political , non-political event Traffic or road blockages, strike, bandh or other disaster	1. All processing Facilities having a minimum capacity of 10 TDP or above shall be classified as Centralized Processing Facility (CPF). 2. Minimum guaranteed waste shall be delivered as per Schedule 6, in the areas provided by the processing facilities or at the gate of the facilities. 3. In case the facility refuses to accept the waste or is non-operational, the concessionaire shall duly inform the IE and deposit the waste in the receptacles provided by the facility operator. The maximum waste acceptable shall be dependent on the available storage/ feeding capacity. Concessionaire shall provide photographs with coordinates on non- acceptance of waste by the centers/facility which shall be considered as tonnage fulfilled for the respective facility/center. Fulfillment form for the partial acceptance of waste shall be signed by authorized personnel of the treatment center/Authority and the same shall be considered as total fulfillment, provided that the center/facility is unable to accept the entire waste. 4. List of the Centralized Processing Facilities shall be updated by the Authority with the processing/feeding capacity and confirmation on the calibrated weighbridge. The Concessionaire shall ensure to match the feeding capacity of the decentralized centers. 5. If the above parameters are in place, the waste quantity collection report will be collected from the processing center/ treatment center and uploaded in the MIS system. 6. The waste that is been collected by the compactor doing a wet waste trip collecting from the only wet waste bins will be delivered to the Processing Facility. The same spirit shall be followed for dry waste and mixed waste. 7. The vehicles shall not be delayed more than 15 minutes in the treatment center which shall affect the subsequent trips and subsequent tonnage. 8. Notification / Letter on changes/revision in deployment and timings will be intimated by the concessionaire to IE and Authority as per operational requirements within 2 hours. 9. The following shall be enclosed as Annexures in the KPI SOP Handbook:

Component	Sub Sl. No.	Key Performance Indicators (KPIs)	Evaluation Mode	Evaluation Formula	Evaluation Process	Data Collection Frequency	Waiver Applicability to be considered during KPI -SOP Handbook preparation & finalization	Indications for SOP and Subvention guideline
								Template of waste quantity supply report Template on Fulfilment report from Treatment Center
	7.9 (b)	Disposal of remaining collected solid waste and rejected consignments from centralised and decentralised processing facilities to Dumpsite/ SLF	Automatic	<<Actual Quantity of waste disposed at Dumpsite/ SLF >> / <<Quantity to be disposed as per Approved MIOP >> * 100		Daily		1. The concessionaire shall deposit thus rejected consignment by the CPU to the dumping ground or land fill. 2. The Authority or the concessionaire appointed by the Authority for landfill shall not deny the acceptance of the rejected waste from the centralized processing facility.
MIS	8.1	Submission of Reports with periodicity & format as prescribed in MIOP and/ or requested by IE/ Authority	Manual	<<Total reports submitted >> / <<Number of reports required to be submitted as per Approved MIOP >> * 100	The concessionaire shall submit the reports as per the specified formats and periodicity which shall be duly verified by IE on monthly basis.	Monthly	NA	Daily report: 1. Daily Project Asset Availability Report, 2. Waste Quantity Report to Decentralized Units and Disposal Facility/ Integrated Processing Facility, 3.Citizen App Working Report, 4. Website Working Report Weekly report: 5. Weekly Complaint Redressal Report 6. DHW Disposal Report Consolidated Monthly report: 7. Monthly Progress Report 8. Employee Report 9. Asset Registry Report 10. Monthly IEC Report, Quarterly report: 11. Consolidated Quarterly Progress report as per Annexue 1 On occurrence: 12. Service Addition or Deletion Report, 13. Contract Administration/ Deviation Report

Component	Sub Sl. No.	Key Performance Indicators (KPIs)	Evaluation Mode	Evaluation Formula	Evaluation Process	Data Collection Frequency	Waiver Applicability to be considered during KPI -SOP Handbook preparation & finalization	Indications for SOP and Subvention guideline
	8.2(a)	Provision of minimum required Manpower	Automatic	<<Actual deployment of Manpower >> / << Minimum required deployment as per Approved MIOP (Amendment)>> * 100	Biometric Attendance system – (Machine / Mobile application) – have been installed at mustering points and/ or attendance points and time in and time out of the concerned manpower shall be reflected in the server on real time basis as per the Concession agreement	Daily	(a) Inclement Weather such as heavy rainfall, flood etc., wherein the worker couldn't commute to their workplace (b) Political, non-political events road/traffic blockages, Strike/ bandh/riot etc	1. The mobile application being used is an extension of the iris scan biometric attendance system and employs the same technology. 2. In case of requirement of repair/replacement/restoration of the Bio metric system, the same shall be done within the period of 48 hours. Due information on the same shall be provided to IE within 2 hours. 3. Post verification the attendance registers shall be duly signed by IE on daily basis. 4. Will provide the MIS list of people by fortnightly. 5. The following shall be enclosed as Annexures in the KPI SOP Handbook: Template of Attendance register
	8.2 (b)	Provision of minimum required Infrastructure	Hybrid	<<Actual deployment of infrastructure >> / << Minimum required deployment as per Approved MIOP >> * 100	The Concessionaire shall install RFID tags on all the infrastructure equipment as mentioned in the MIS infrastructure list. By the 2nd day of every month, the concessionaire shall submit the auto generated RFID reports for the preceding month.	Monthly	NA	1. Daily 4 photographs will be sent by Concessionaire/ RFID report 2. List of infrastructures is provided in Annexure XIX
Complaint Redressal	9.1	Redressal of all complaints within 6 hours except 9.2	Automatic	<<Actual no. of verified complaints + backlog completed>> / <<Total no. of complaints received + backlog>> * 100	All Complaints received from PGR and Concessionaire CCC system shall be redressed within the timelines scheduled in the SLA as enclosed herewith. The complaints are received by following means, such as telephone calls, Social media, Newspaper, Mobile app etc., When the complaint is received, a token will be created in Authority's PGR system. From the time of creation of the token, the timelines for redressal as per SLA commences.	Daily	(a) Inclement Weather such as heavy rainfall, flood etc., wherein it will affect the movement of the workers to redress the complaints (b) Political, non-political events road/traffic blockages, Strike/ bandh/riot etc	1. The MIS system of the Concessionaire will be integrated with PGR of Authority. Access shall be provided to the representatives of the Concessionaire for closure/redressal of complaints in PGR system. 2. During down time of Authority server, the concessionaire shall provide the necessary evidence on non-redressal of the complaint status. The screen shot of the website/ applications shall be provided as evidence by the Concessionaire. 3. The KPI SOP Handbook will have compliant redressal SLA.

Component	Sub Sl. No.	Key Performance Indicators (KPIs)	Evaluation Mode	Evaluation Formula	Evaluation Process	Data Collection Frequency	Waiver Applicability to be considered during KPI -SOP Handbook preparation & finalization	Indications for SOP and Subvention guideline
	9.2	Redressal of complaints for Replacement/ Retro fitment/ Repairing of Assets within 24 hours	Hybrid	<<Actual no. of verified complaints + backlog completed>> / <<Total no. of complaints received + backlog>> * 100	All Complaints received from PGR and Concessionaire CCC system shall be redressed within the timelines scheduled in the SLA as enclosed herewith. The complaints are received by following means, such as telephone calls, social media, newspaper, mobile app etc., When the complaint is received, a token will be created in Authority's PGR system. From the time of creation of the token, the timelines for redressal as per SLA commences. All complaints on replacement/retro fitment/repairing of assets shall be resolved within the period of 24 hours	Daily	(a) Inclement Weather such as heavy rainfall, flood etc., wherein it will affect the movement of the workers to redress the complaints (b) Political, non-political events road/traffic blockages, Strike/ bandh/riot etc	1. The MIS system of Concessionaire shall be integrated with PGR of Authority. 2. Related access shall be provided to the representatives of the Concessionaire for closure/redressal of complaints in PGR. 3. During down time of Authority server, the concessionaire shall provide the necessary evidence of non-redressal of the complaint status. 4. The screen shot of the website/ applications shall be provided as evidence by the Concessionaire 5. Only specific assets shall be considered for the retro-fitment/ replacement or repairing.
	9.3	Functional 24*7 Call Centre (IVRS)	Automatic	<<Actual no. of calls answered or returned>> / <<Total no. of calls received>> * 100		Daily	NA	Random call by IE and the Authority per day- at least once in a shift.
Compliances	10.1	Legal compliances	Manual	<<Actual no. of verified documents/certificates given>> / <<Total no. of compliances documents/certificates as per Approved MIOP >> * 100	Submission of report by the Concessionaire	Monthly	NA	1. Any waiver or relaxation in filing issued by Government to certain legal compliances shall be take in to account during computation of KPI. 2. The following shall be enclosed as Annexures in the KPI SOP Handbook: *Monthly:* 1.Provident Fund, 2. Employee State Insurance, 3. Driving licenses of HMV and LMVs 4. Water and sewer connection in workshop 5. Workshop compliances. *Quarterly* 6. Quarterly Balance sheet statement 7.P&L Cash flow statement. *Yearly* 8. Insurance for vehicles, 9. Permits/registration for vehicles, 10. Fitness certificate 11. Pollution Under Control certificate

Component	Sub Sl. No.	Key Performance Indicators (KPIs)	Evaluation Mode	Evaluation Formula	Evaluation Process	Data Collection Frequency	Waiver Applicability to be considered during KPI -SOP Handbook preparation & finalization	Indications for SOP and Subvention guideline
								One time 12.PAN and 13.GST, *On occurrence* 14. Accident report
	10.2 (a)	EHS Compliances - manpower PPE	Hybrid	<< Total number of applicable employees with PPE as per Approved MIOP (-) Verified Evidence of Violations >> / << Total number of applicable employees with PPE as per Approved MIOP>> * 100	IE Photo Evidence – violation: The violation photographs shall be uploaded by the Independent engineer through IE mobile applications	Daily	NA	1. Photographic evidence on violation by IE.
	10.2 (b)	EHS Compliances - firefighting equipment for vehicles	Hybrid	<<Actual no. of vehicles with safety gear deployed (-) Verified evidence of violations>> / <<Total no. of vehicles with safety gear as per Approved MIOP >> * 100	IE Photo Evidence – violation: The violation photographs shall be uploaded by the Independent engineer through IE mobile applications	Daily	NA	1. Photographic evidence on violation by IE.
	10.3	Non- mixing of C&D waste/ Horticultural waste/Biomedical waste/ hazardous waste/ Drain Silt with solid waste	Hybrid	<<Actual number of bins - violation photographic evidences by IE >> / <<Total No. of bins>> * 100	Bin validation	Daily		Photographic evidence on violation by IE.

Component	Sub Sl. No.	Key Performance Indicators (KPIs)	Evaluation Mode	Evaluation Formula	Evaluation Process	Data Collection Frequency	Waiver Applicability to be considered during KPI -SOP Handbook preparation & finalization	Indications for SOP and Subvention guideline
	10.4	Regular inspections of Workshop, Server Room & Complaint Redressal System	Manual	<<Actual visual inspection score/100 >> * 100	IE physical verification report	Weekly		The following shall be enclosed as Annexures in the KPI SOP Handbook: 1) The list of facilities that come under the purview of workshop, server room and Complaint redressal 2) Template of Physical verification report.
IEC Activities	11.1	Conducting Information, Education and Communication Activities as per Schedule 12 & MIOP	Manual	<<Total households covered under door to door campaigns>> / <<Total number of households target as per Approved MIOP>> * 100	The Concessionaire shall submit the completed list of activities as per the IEC plan scheduled for the concerned month.	Monthly	(a) Inclement Weather such as heavy rainfall, flood etc the campaigns could not be performed (b) Political, non-political events, road/traffic blockages, Strike/ bandh/riot etc	1) Fixing of realistic targets (progressive) on a monthly basis by IE & Concessionaire 2) The weekly activity plan shall be provided before 7 working days by the concessionaire to the IE. 3) The Photographs of the same shall be uploaded..
	11.2	Coverage of Door-to-Door Campaigns as per MIOP	Manual	<<Total households covered under door to door campaigns>> / <<Total number of households target as per Approved MIOP>> * 100	Monthly IEC Report (Target) - Start of month & Monthly IEC Report Results) - End of month	Monthly	(a) Inclement Weather such as heavy rainfall, flood etc the campaigns could not be performed (b) Political, non-political events, road/traffic blockages, Strike/ bandh/riot etc	1) Fixing of realistic targets (progressive) on a monthly basis by IE & Concessionaire 2) The weekly activity plan shall be provided before 7 working days by the concessionaire to the IE. 3) The Photographs of the same shall be uploaded..
	11.3	Achieving segregation up to 70 % at HH level in 36 months and maintenance of 70 % thereafter	Manaul	<<Total HHs giving pre-segregated Waste>> / << HHs target for collecting pre-segregated waste for the month as per Approved MIOP >> * 100	IE's visual inspection record- 33% of the number of households to be physically verified by IE.	Monthly	(a) Inclement Weather and flood, the BOVs cannot carryout the Door to door collection due to water prones areas, in such situations 2 ton tipper will be sent and collected the waste from households. (b) Political, non-political events road blockages/ Strike/ bandh/riot etc.,. (c) Concessionaire will intimate the IE and authority on the list of households intentional non segregation of waste. IE and	1. The concessionaire, IE & Authority shall conduct a baseline survey for evaluating and fixing the percentage of segregated and unsegregated household on COD. The monthly targets shall be fixed, and average of the zone wise deficiency shall be calculated for this KPI evaluation. The Critical numbers will be revised based on the monthly targets which will be derived from base line data. The list of households delivering unsegregated waste will be intimated by the concessionaire to IE and Authority. 2. Evidence of the IEC awareness and training on source segregation given to the Households. 3. Notification / Letter on changes/revision in deployment and timings will be intimated by the concessionaire to IE and Authority as per operational requirements within 2 hours. 4. For IEC survey, the schedule of routes to be mutually decided by concessionaire and IE, same shall be shared with the Authority, within 5 working days before the start of the month. If there is any change in schedule of the BOV route, Concessionaire shall inform the changes in deployment to the IE and Authority prior to the start of the shift. In case there is absence of IE supervisor for a particular route, the IE can choose another route with mutual agreement which shall be completed within the month.

Component	Sub Sl. No.	Key Performance Indicators (KPIs)	Evaluation Mode	Evaluation Formula	Evaluation Process	Data Collection Frequency	Waiver Applicability to be considered during KPI -SOP Handbook preparation & finalization	Indications for SOP and Subvention guideline
							authority shall take appropriate action	5. As agreed by all stakeholders, the IEC awareness by concessionaire will be conducted in the households consecutively for a period of four days and IE team will participate in the awareness on the 3rd and 4th days. On day 4, concessionaire shall give a notification slip to the household which specifies the method of segregation and penalty provisions as per SWM bye-laws which is enclosed herewith as Annexure ---. 6. While evaluating the KPI, all vacant houses/ vacant lands will be removed from the 'total number of households' in the calculation methodology/ formula. However, house holds not providing the waste shall be included in the 'total number of households' if they provide waste in any one -day of the afore said CAM4 schedule (four days continuously), such households will be considered in the segregated/ unsegregated list of the evaluation methodology formula. Furthermore, the households which is not participating in the door to door collection by not providing waste for the consecutive 4 days shall be considered as vacant/locked/open land or houses which thereupon shall be removed from 'total number of households' formula. 7. The survey will be done by the IE along with the concessionaire for 2 continuous days. 8. At the end of evaluation of the route, IE personnel and Concessionaire to mutually share the report and signature of IE, Concessionaire IEC department and BOV driver shall be affixed in both IE's report as well as the Concessionaire's reports. 9. Post such evaluation, the continuous defaulter's details will be sent to IE and Authority for taking appropriate action. If no action is taken, such defaulted households will not be considered in the next month's evaluation. 10. The Scanned copy of each route to be shared between IE and Concessionaire within 24 hours. 11. The following shall be enclosed as Annexures in the KPI SOP Handbook: Template of IE's Visual Inspection report Concessionaire IEC report template and template model of segregating and un-segregating schedule

25.5 Evaluation Mechanism during Disasters

a) The occurrence of Disaster in the Project Area shall be notified by the National Disaster Management Authority of India.

b) Post official notification of Disaster, the Disaster Management KPIs shall become effective in place of O&M KPIs and evaluation shall be on the basis of those specific KPIs for the entire duration of the Disaster.

The Disaster Management KPIs shall primarily focus on primary and secondary-collection & transportation of waste to designated facility/ site, collection and transportation of horticultural waste and construction & demolition waste to designated facility along with deployment of adequate manpower and infrastructure

25.6 Illustrative Example of Incentive Payment:

Example: if, the Concessionaire has not been levied any penalty for any of the core KPIs for the months May, June, July and August. Then the Concessionaire is eligible for incentive payment for the May, June & July block as follows:

Incentive Payment = 1% * (MQ of May + MQ of June + MQ of July)

The month of August shall be considered for the next cycle of incentive payment if applicable.

25.7 Example of Surcharge on Penalty:

In the examples given below, the last column (Effective Penalty Rate) shall be considered for KPI Penalty surcharge calculation.

Penalty Rate: 5%						
Months	Deficiency Level	Applicable Penalty Slab	Applicable Base Penalty Rate	Surcharge on Penalty	Cumulative penalty rate if continuous	Effective Penalty Rate
1	8%	Slab 1 (5%)	5%	0	5.00%	5.00%
2	6%	Slab 1 (5%)	5%	1.25%	6.25%	6.25%
3	7%	Slab 1 (5%)	5%	1.56%	7.81%	7.81%
4	4%	Slab 1 (5%)	5%	1.95%	9.77%	9.77%
5	3%	Slab 1 (5%)	5%	2.44%	12.21%	10.00%
6	8%	Slab 1 (5%)	5%	3.05%	15.26%	5.00%
7	7%	Slab 1 (5%)	5%	3.81%	19.07%	6.25%
8	4%	Slab 1 (5%)	5%	4.77%	23.84%	7.81%
9	8%	Slab 1 (5%)	5%	5.96%	29.80%	9.77%
10	9%	Slab 1 (5%)	5%	7.45%	37.25%	10.00%
11	9%	Slab 1 (5%)	5%	9.31%	46.57%	5.00%
12	6%	Slab 1 (5%)	5%	11.64%	58.21%	6.25%
13	9%	Slab 1 (5%)	5%	14.55%	72.76%	7.81%

14	4%	Slab 1 (5%)	5%	18.19%	90.95%	9.77%
15 and so on so forth	7%	Slab 1 (5%)	5%	22.74%	113.69%	10.00%

Penalty Rate: 10%						
Months	Deficiency Level	Applicable Penalty Slab	Applicable Base Penalty Rate	Surcharge on Penalty	Cumulative penalty rate if continuous	Effective Penalty rate
1	18%	Slab 2 (10%)	10%	0	10.00%	10.00%
2	15%	Slab 2 (10%)	10%	2.50%	12.50%	12.50%
3	11%	Slab 2 (10%)	10%	3.13%	15.63%	15.63%
4	16%	Slab 2 (10%)	10%	3.91%	19.53%	19.53%
5	19%	Slab 2 (10%)	10%	4.88%	24.41%	20.00%
6	17%	Slab 2 (10%)	10%	6.10%	30.52%	10.00%
7	19%	Slab 2 (10%)	10%	7.63%	38.15%	12.50%
8	13%	Slab 2 (10%)	10%	9.54%	47.68%	15.63%
9	15%	Slab 2 (10%)	10%	11.92%	59.60%	19.53%
10	16%	Slab 2 (10%)	10%	14.90%	74.51%	20.00%
11	19%	Slab 2 (10%)	10%	18.63%	93.13%	10.00%
12	12%	Slab 2 (10%)	10%	23.28%	116.42%	12.50%
13	18%	Slab 2 (10%)	10%	29.10%	145.52%	15.63%
14	11%	Slab 2 (10%)	10%	36.38%	181.90%	19.53%
15 and so on..	17%	Slab 2 (10%)	10%	45.47%	227.37%	20.00%

Penalty Rate: 20%						
Months	Deficiency Level	Applicable Penalty Slab	Applicable Base Penalty Rate	Surcharge on Penalty	Cumulative penalty rate if continuous	Effective Penalty rate
1	21%	Slab 3 (20%)	20%	0	20.00%	20.00%
2	22%	Slab 3 (20%)	20%	5.00%	25.00%	25.00%
3	23%	Slab 3 (20%)	20%	6.25%	31.25%	31.25%
4	24%	Slab 3 (20%)	20%	7.81%	39.06%	39.06%
5	25%	Slab 3 (20%)	20%	9.77%	48.83%	45.00%
6	26%	Slab 3 (20%)	20%	12.21%	61.04%	20.00%
7	23%	Slab 3 (20%)	20%	15.26%	76.29%	25.00%
8	25%	Slab 3 (20%)	20%	19.07%	95.37%	31.25%

Penalty Rate: 20%						
Months	Deficiency Level	Applicable Penalty Slab	Applicable Base Penalty Rate	Surcharge on Penalty	Cumulative penalty rate if continuous	Effective Penalty rate
9	28%	Slab 3 (20%)	20%	23.84%	119.21%	39.06%
10	26%	Slab 3 (20%)	20%	29.80%	149.01%	45.00%

Penalty Rate: Variable						
Months	Deficiency Level	Applicable Penalty Slab	Applicable Base Penalty Rate	Surcharge on Penalty	Cumulative penalty rate if continuous	Effective Penalty rate
1	8%	Slab 1 (5%)	5%	0	5.00%	5.00%
2	6%	Slab 1 (5%)	5%	1.25%	6.25%	6.25%
3	7%	Slab 1 (5%)	5%	1.56%	7.81%	7.81%
4	4%	Slab 1 (5%)	5%	1.95%	9.77%	9.77%
5	3%	Slab 1 (5%)	5%	2.44%	12.21%	10.00%
6	18%	Slab 2 (10%)	10%	0	10.00%	10.00%
7	15%	Slab 2 (10%)	10%	2.50%	12.50%	12.50%
8	11%	Slab 2 (10%)	10%	3.13%	15.63%	15.63%
9	16%	Slab 2 (10%)	10%	3.91%	19.53%	19.53%
10	19%	Slab 2 (10%)	10%	4.88%	24.41%	20.00%
11	9%	Slab 1 (5%)	5%	0	5.00%	5.00%
12	9%	Slab 1 (5%)	5%	1.25%	6.25%	6.25%
13	6%	Slab 1 (5%)	5%	1.56%	7.81%	7.81%
14	9%	Slab 1 (5%)	5%	1.95%	9.77%	9.77%
15	4%	Slab 1 (5%)	5%	2.44%	12.21%	10.00%
16	26%	Slab 3 (20%)	20%	0	20.00%	20.00%
17	23%	Slab 3 (20%)	20%	5.00%	25.00%	25.00%
18	25%	Slab 3 (20%)	20%	6.25%	31.25%	31.25%
19	28%	Slab 3 (20%)	20%	7.81%	39.06%	39.06%
20	26%	Slab 3 (20%)	20%	9.77%	48.83%	45.00%

26 Schedule 27: IAQ

To be incorporated post tender

27 Schedule 28: Indicative Route Chart for C&T[34]

BoV Model Route Chart Map-Primary Collection

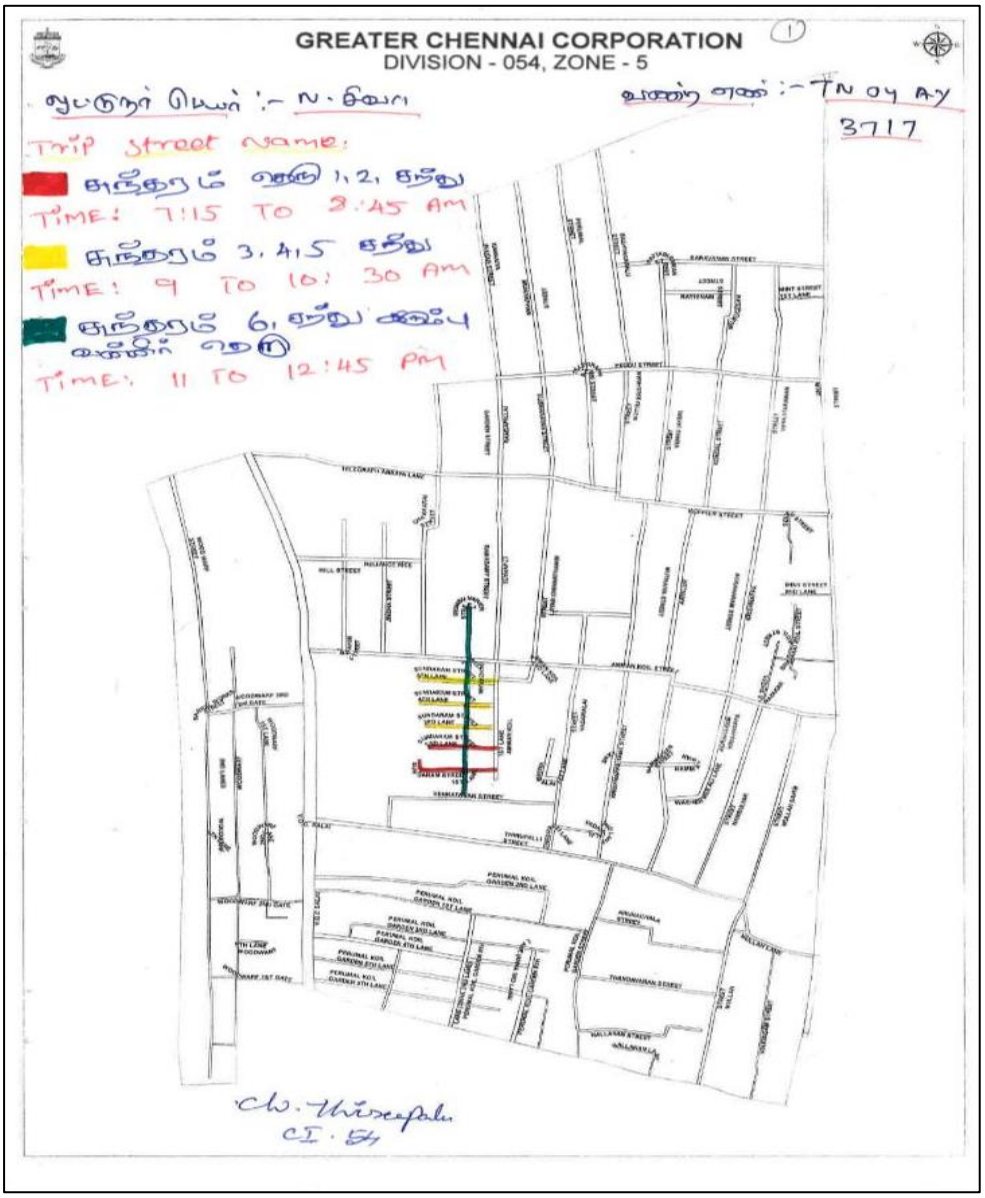

[34] This is a model route chart map presently done by Authority for one of its Zones. This shall be taken as reference by the Concessionaire for preparation & finalizing the MIOP with Authority. The Concessionaire shall also make its own route chart map subject to condition that the MIOP/chart satisfies Authority's conditions and is in line with the Concession Agreement.

Mechanical Sweeper- Route Chart Map

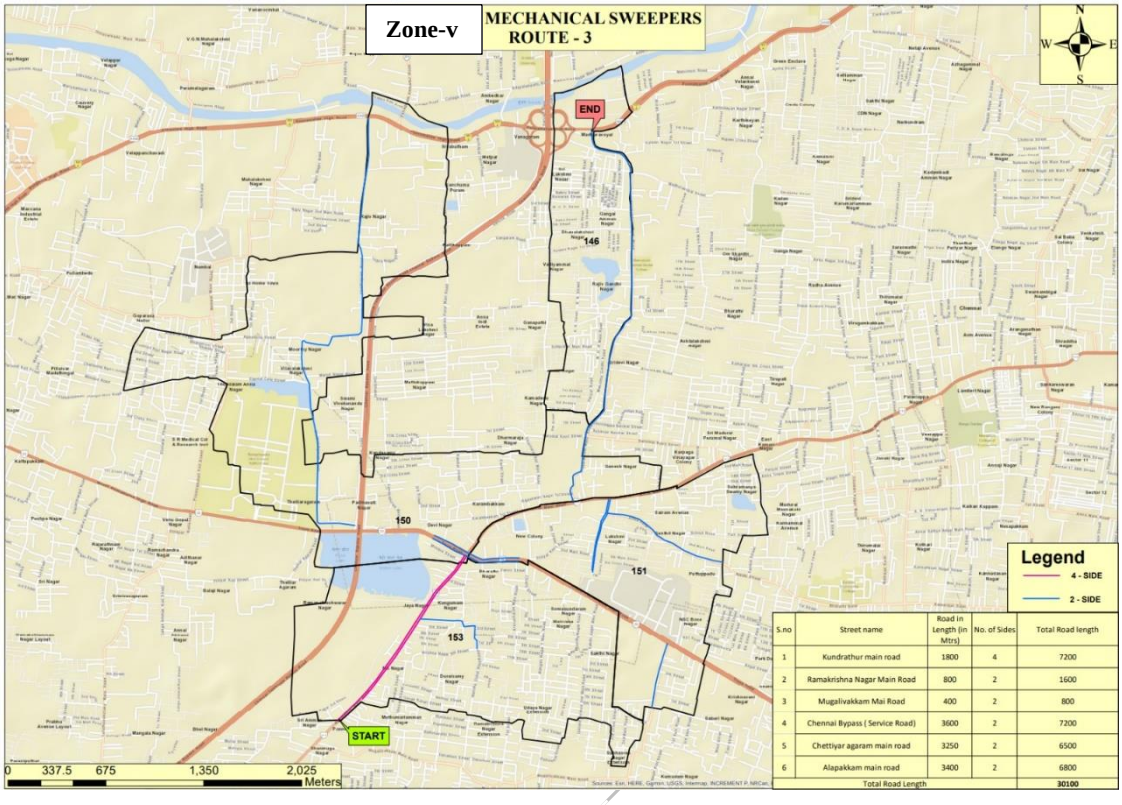

S.no	Street name	Road in Length (in Mtrs)	No. of Sides	Total Road length
1	Kundrathur main road	1800	4	7200
2	Ramakrishna Nagar Main Road	800	2	1600
3	Mugalivakkam Mai Road	400	2	800
4	Chennai Bypass (Service Road)	3600	2	7200
5	Chettiyar agaram main road	3250	2	6500
6	Alapakkam main road	3400	2	6800
	Total Road Length			30100

Refuse Compactor - Route Chart

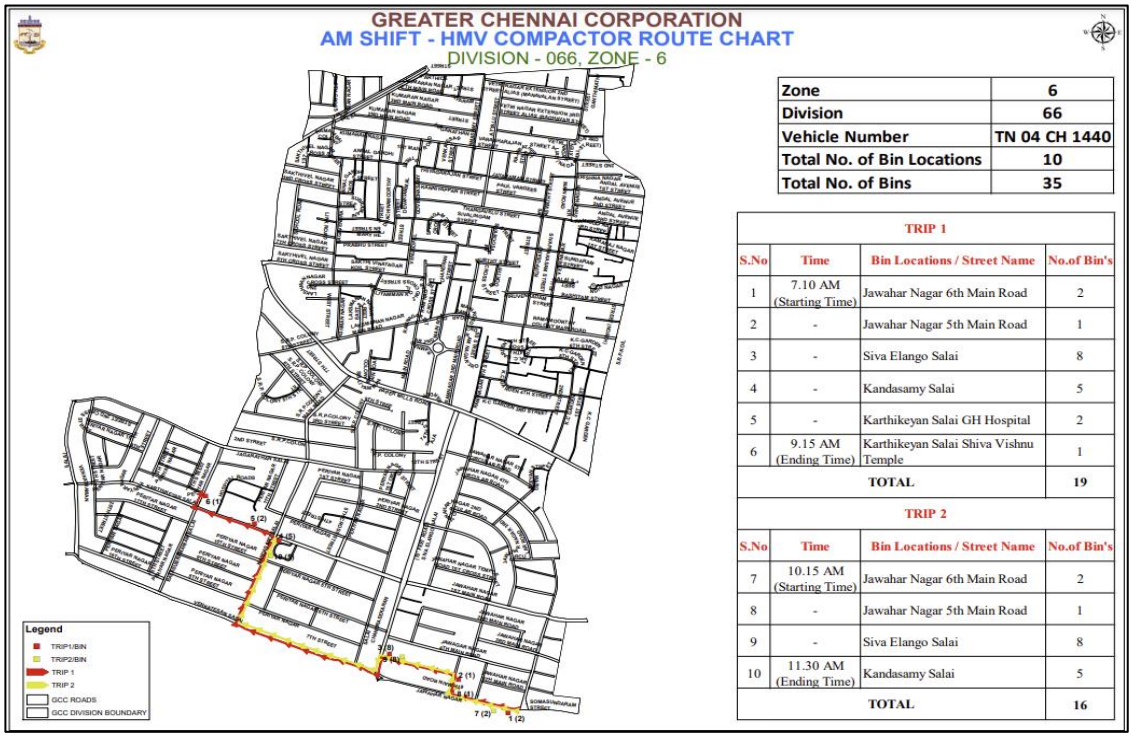

Zone	6
Division	66
Vehicle Number	TN 04 CH 1440
Total No. of Bin Locations	10
Total No. of Bins	35

TRIP 1			
S.No	Time	Bin Locations / Street Name	No.of Bin's
1	7.10 AM (Starting Time)	Jawahar Nagar 6th Main Road	2
2	-	Jawahar Nagar 5th Main Road	1
3	-	Siva Elango Salai	8
4	-	Kandasamy Salai	5
5	-	Karthikeyan Salai GH Hospital	2
6	9.15 AM (Ending Time)	Karthikeyan Salai Shiva Vishnu Temple	1
TOTAL			19

TRIP 2			
S.No	Time	Bin Locations / Street Name	No.of Bin's
7	10.15 AM (Starting Time)	Jawahar Nagar 6th Main Road	2
8	-	Jawahar Nagar 5th Main Road	1
9	-	Siva Elango Salai	8
10	11.30 AM (Ending Time)	Kandasamy Salai	5
TOTAL			16



Annexure-I

List of LFC in Zone-5[35]

S.No	Div.No	Unit. No	Name of the Road	From	To	Length
1	53	12	Basin Bridge road	From Mint Tower Clock	Walltax Road	720 m
2	59	14	Rattan Bazzar & Evening Bazzar	NSC Bose road	Poonamallee Road	790 m
3	60	13	Rajaji Salai	NRT Bridge	Napier Bridge	2500 m
4	60 & 59	13 & 14	NSC Bose Road	Walltax Road	Rajaji Salai	700 m
5	58 & 59	14	Poonamallee High road	Muthuswami Bridge Road	Gandhi Irvin Road	1200 m
6	59	14	Anna salai	Muthusami Salai	Spencer Plaza Signal	1200 m
7	61	14	Pantheon road	Ethiraj Salal	Gandhi irwin Road	1550 m
8	61	14	Gandhi Irwin road	Gi Bridge	PCO Road	900 m
9	63	14	G.P. road	Anna Salai	Woods Road	650 m
TOTAL						**10210 M**

[35] The LFC list shall increase or decrease during the Concession Period..

List of LFC in Zone-6[36]

S.No	Div.No	Unit. No	Name of the Road	From	To	Length
1	75	17	Govt. Polytechnic College Road	Secretariat Colony	Dead end	250 m
2	73	17	DC/ Pulianthope Ambedkar college road	Pulianthope high road	Stephenson road	750 m
3	66	16	CMDA Market (paper mills road)	SRP Colony main road	School road	500 m
4	68	16	Jawahar Nagar 1st Circular road	Jawahar nagar 1st main road	Jawahar nagar 3rd circular road	300 m
5	76	17	Zonal Office (Strahans road)	Bricklin road	Perambur barracks road	600 m
6	71	16	Perambur railway station and bus stand	M.H Road	Bharathi road	250 m
7	67	16	Thiru.Vi.Ka. Nagar bus stand	Paper mills road	Pallavan salai	300 m
8	68	16	Periyar Nagar bus stop	Kandasamy street	Balasubramaniam Street	200 m
9	72	17	Slaughter house	Otteri nalla	Decastor road	200 m
10	65	15	Reteri Junction (Metro station)	Paper mills road	Everwin school	400 m
11	68	16	Pallavan salai	SRP koil north	M.H Road	700 m
12	73	17	Pattalam market	Angalamman koil street	Barracks gate road	200 m
TOTAL						**4650 M**

[36] The LFC list shall increase or decrease during the Concession Period.